Oscar Pinkus
Mechanical Technology Inc.,
Latham, NY 12110

The Reynolds Centennial: A Brief History of the Theory of Hydrodynamic Lubrication

Introduction

This paper offers a brief review of the history of the theory of hydrodynamic lubrication written on the occasion of what may be considered the 100th anniversary of its birth. The present text is, of course, not the first to take a look at the history of this science. Others include Archibald (1957), Pinkus (1962), Cameron (1966), Dowson (1977), and Rohde (edit) (1983). Although the title of this paper is sufficiently explicit, it is still perhaps desirable to stress that this is not a history of tribology of which the present subject is but a part. Even with respect to the hydrodynamic theory of lubrication, the purpose of this paper is not the cataloging of works conducted over the last 100 years, a task more suitable to an encyclopedia than a paper. What will be attempted is a historical overview aimed at delineating the topography of the subject as it was formed and shaped by key contributors in the course of its development. Consequently, the references at the end of the paper are not, in any sense of the word, a bibliography, but rather a most stringent selection of milestones on the long road to our present state of knowledge in this field.

The elapsed century is, somewhat arbitrarily, divided into five periods characterized by their unequal progress in the field. Aside from its historical perspective, an attempt is made to evaluate the present status of the theory vis-a-vis the past. This commemorative paper, therefore, in addition to paying tribute to generations of scientists who passed on to us this often elegant and always practical branch of science, will also, perhaps, help the present community of tribologists to properly chart their professional activities for the future.

Foundations of the Science: The 1880s

There were three men who within a few years and independent of each other discovered and formulated the mechanism of hydrodynamic lubrication and laid its foundation as a branch of engineering science. They were a Russian, N. P. Petrov (1836–1920), and two Britons, B. Tower (1845–1904) and O. Reynolds (1842–1912). What all three had in common was that they perceived the process of lubrication as being due not to the mechanical interaction of two solid surfaces but to the dynamics of a fluid film separating them. This is the fundamental aspect of hydrodynamic lubrication and within a brief three years, 1883–1886, both its theoretical and experimental foundations were firmly established.

The crystallization of the concept started with Nicolai Petrov whose main interest was in the area of friction. He postulated two cardinal things: first, that the important fluid property with regard to friction is not its density, as was assumed by his contemporaries, but viscosity; and second, that the nature of friction in a bearing is not the result of the rubbing of two solid surfaces but stems from the viscous shearing of an intervening fluid film. In other words, he proposed the hydrodynamic nature of friction in bearings. He then went on to formulate in his basic paper, (Petrov 1883)* the functional relationship between frictional force and bearing parameters, as

$$F_\tau \simeq \frac{\mu U A}{h} \tag{1}$$

an expression valid to this day. It is worth noting that Petrov was a true tribologist in as much as his interests embraced also the properties of lubricants and materials, subjects on which he wrote nearly 80 papers during his tenure as professor at the Technical Institute of St. Petersburg in Tsarist Russia.

It is somewhat surprising that Petrov failed to extend his insight into the nature of friction to the load carrying capacity of bearings. This fundamental discovery fell to Beauchamp Tower. It again started with what has been in the history of bearings a quasi obsessive concern with friction. Petrov himself followed up his 1883 paper with a number of publications on measurements of frictional losses in bearings. Likewise the Institution of Mechanical Engineers in Great Britain, which had organized a Research Committee on Friction at High Velocities, commissioned Tower to conduct a series of experiments on friction in railroad bearings, the railroad being another of those persistent strains in the history of tribology. Beauchamp Tower was an engineer, an inventor, and a research assistant to such luminaries as Froude and Lord Rayleigh, the latter being also a personal friend of Tower's as well as a member of the committee. This famous series of experiments which was to lead to the discovery of the presence of hydrodynamic pressures in the fluid film took place in 1883–1884.

The geometry and operating condition of the first bearing tested by Tower is shown in Fig. 1(*a*). At one stage, instead of

Contributed by the Tribology Division of THE AMERICAN SOCIETY OF MECHANICAL ENGINEERS and presented at the ASME/ASLE Joint Lubrication Conference, Pittsburgh, Pa., October 20–22, 1986. Manuscript received by the Tribology Division, March 1, 1986. Paper No. 86-Trib-22.

*Given the nature of this article, references are arranged chronologically at the end of the paper.

Copyright © 1987 by ASME

Downloaded 16 Aug 2012 to 165.91.101.108. Redistribution subject to ASME license or copyright; see http://www.asme.org/terms/Terms_Use.cfm

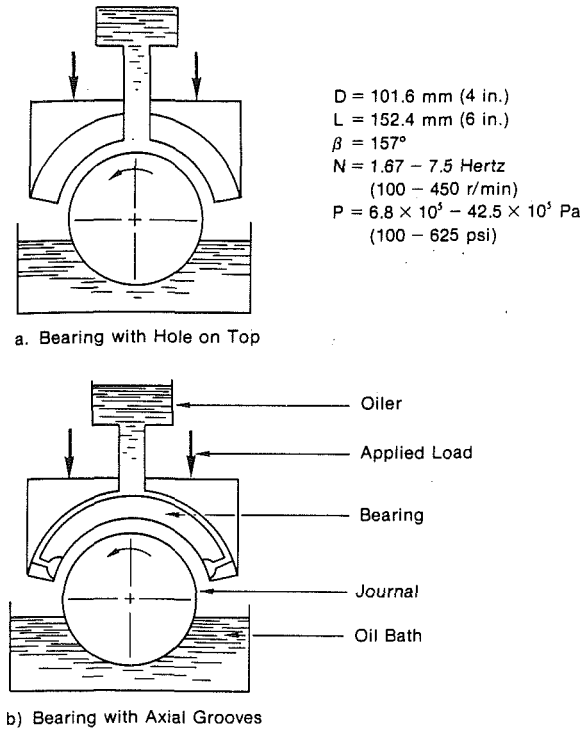

Fig. 1 Tower's experimental bearings

relying on bath lubrication, Tower decided to use an oiler. For this purpose he drilled a 1/2-in. hole at the center of the bearing. However, when the journal started to rotate, Tower noticed that oil was being pumped out of the bearing. In order to stop the leakage, first a cork and then a wooden plug were inserted, but both were ejected from the hole. With his keen insight Tower realized what was happening: a fluid film was separating the journal from the bearing and the fluid was under high pressure. Tower went on to modify his bearing geometry in the direction of what we now know to be the correct way of supplying lubricant, namely a set of axial grooves. This second bearing is shown in Fig. 1(*b*). Tower then installed a set of pressure gauges over the bearing surface. He obtained a map of hydrodynamic pressures which when integrated over the bearing surface equaled the applied load. These historical results were published in two reports (Tower 1883, 1885); Fig. 2, showing the pressure map, is taken from the second of these papers. Thus was the concept of hydrodynamic lubrication born.

Both Petrov and Tower arrived at their concepts via experimentation and all that was needed to give the edifice a solid scientific ground was a theoretical basis for the experimental observations. This was achieved by Osborne Reynolds almost simultaneously with the two others. It again started with friction. At a meeting of the British Association for the Advancement of Science, held in Montreal, Canada, in 1884, Reynolds read two papers—one entitled "On the Action of Lubricants," and the other "On the Friction of Journals."

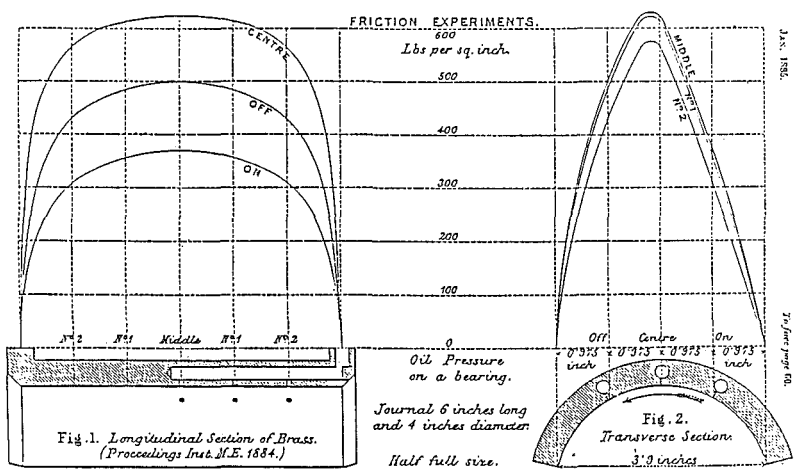

Fig. 2 Tower's presentation of hydrodynamic pressures in journal bearings

Nomenclature

a = inlet-to-outlet film thickness ratio
A = area
B = length in x direction, damping coefficient
C = radial clearance
D = diameter
e = eccentricity
f = friction coefficient
F_τ = frictional force
G = turbulence coefficient
h = film thickness
K = spring coefficient
L = width in z direction
M = rotor mass on bearing
p = pressure
R = radius of bearing or journal
T = temperature
U = linear velocity
V = normal velocity
W = load on bearing
$\bar{W}$ = $(W/LD\mu N)(C/R)^2$
x = coordinate in U direction
y = coordinate across film
z = coordinate normal to U
α = viscosity-temperature coefficient
β = bearing arc
λ = wavelength of asperities
σ = height of asperities
ϵ = (e/C), eccentricity ratio
θ = angular coordinate in U direction
θ_2 = end of hydrodynamic film
μ = absolute viscosity
ρ = density
ϕ = attitude angle
ω = rotational frequency

Subscripts

0 = bearing surface
1 = start of film
2 = end of film
s = start of pad

Downloaded 16 Aug 2012 to 165.91.101.108. Redistribution subject to ASME license or copyright; see http://www.asme.org/terms/Terms_Use.cfm

It was at this Montreal meeting that Reynolds for the first time discussed his differential equation explaining the hydrodynamic nature of lubrication. No published record remains of any of Reynolds' contributions at the Montreal meeting. However, the timing of this meeting, 1884, lends further support to the view that Reynolds had developed his theory without knowledge of Tower's crucial experiment.

The reigning place that Osborne Reynolds occupies in the history of hydrodynamic lubrication is, of course, due to the formulation of the basic differential equation bearing his name. It provides the physical and mathematical foundations of the science in such lucid and comprehensive terms that it has remained the essential and unimpeachable tool to this day. The paper (Reynolds 1886) containing the derivation of this equation was read to the Royal Society on February 11, 1886, and in it the equation appears in the form of

$$\frac{\partial}{\partial x}\left(h^3 \frac{\partial p}{\partial x}\right)+\frac{\partial}{\partial z}\left(h^3 \frac{\partial p}{\partial z}\right)=6\mu\left[(U_0+U_1)\frac{dh}{dx}+2\ V\right] \tag{2}$$

The new concept that emerged from this formulation, something that was not apparent from Tower's results, was that, barring squeeze film effects, hydrodynamic action requires that $(dh/dx) < 0$. The presence of a geometric wedge is, of course, a basic feature in all of hydrodynamic lubrication.

Reynolds' paper running to nearly 80 pages contains much additional pioneering work besides the differential equation, viz.

- A squeeze film solution for two elliptical plates approaching each other with a velocity V.
- The concept of infinitely long bearings

$$\frac{\partial}{\partial x}\left(h^3 \frac{\partial p}{\partial x}\right)=6\mu U \frac{dh}{dx} \tag{3}$$

  which Reynolds attempted to solve for both a journal bearing and a slider.
- The derivation of an optimum slider for which $a = 2.2$.
- The concern with cavitation in the diverging portions of journal bearings for which Reynolds was the first to suggest the correct trailing boundary condition of

$$p=\frac{dp}{dx}=0 \text{ at } \theta=\theta_2 \tag{4}$$

- Formulation of the $\mu - T$ relationship

$$\mu=\mu_0 e^{-\alpha(T-T_0)} \tag{5}$$

  which if not always satisfactory is an extremely useful relation in the analytical treatment of variable viscosity.
- The notion of a bearing having clearance, i.e., of journal and bearing radii differing by an amount C. In Reynolds' days fitted bearings ($C = 0$) seemed to have been a natural choice.

In retrospect the paper also contains some inexplicable lapses. In trying to solve equation (3) for journal bearings, Reynolds somehow made no attempt to simply integrate the expressions

$$I=\int \frac{d\theta}{(1+\epsilon \sin \theta)^3}, \quad J=\int \frac{d\theta}{(1+\epsilon \sin \theta)^2} \tag{6}$$

although the integrals were then known to be integrable. Instead he developed his solution for the pressure in terms of an infinite series which not only is cumbersome, but which does not converge at $\epsilon > 0.5$. Also in comparing his $L/D = \infty$ solution with Tower's results for an $L/D = 1.5$, Reynolds resorted to the doubtful procedure of picking arbitrarily such values for e and C as to achieve agreement. Yet, even this sleight of hand was not without merit. In matching theory with experiment, Reynolds obtained a value of $C = 0.02$ mm (0.8 mils) and thus provided an order of magnitude for the clearances required in hydrodynamic bearings, a quantity unknown to his contemporaries.

Evolution Into an Engineering Discipline: 1890–1925

As described above, Petrov, Tower, and Reynolds can be considered the founding fathers of the concept of hydrodynamic lubrication. The coincidence of their near simultaneous emergence on the scene marks the mid-1880s as the undisputed birthdate of this branch of science. Subsequently, not much would be altered in the basic tenets laid down by this triumvirate. The history of the subject over the next half-century is essentially that of converting what was in 1886 merely the nucleus of a science into an engineering discipline.

The most important step in the next phase was the discovery that the fluid film does not have to be an oil or a liquid, but that it can be a gas. This discovery was made by Albert Kingsbury (1863–1943) and again accidentally. As Professor of Mechanical Engineering at the College of A & MA in Hanover, N.H., he had in 1892 built a torsion-compression machine which contained a cylinder piston arrangement 152.3 mm (6 in.) in diameter. With the cylinder in a vertical position Kingsbury one day twirled the piston and found that the slightest effort would make it spin. The same near-frictionless rotation could be imparted to the piston when it was in a horizontal position, i.e., loaded. The thought that occurred to Kinsbury was the same as Tower's, namely, that the rotation was due to the presence of a fluid film, in this case air. Kingsbury went on to construct a special bearing 152.4 mm (6 in.) in diameter with a radial clearance of 0.02 mm (0.8 mils) carrying a load of 222.4 N (50 lb) which he ran on both air and hydrogen. He installed axial and circumferential pressure taps and measured the pressure field—all without having heard of Reynolds. In 1897 Kinsbury read the Reynolds paper and published his own findings. Thus was the phenomenon of hydrodynamic lubrication extended to compressible fluids, a milestone in the history of tribology.

Kingsbury's standing in the field is not limited to gas bearings for he is also known as the inventor of the tilting pad bearing. The history of tribology harbors many paradoxes and coincidences, and the story of tilting pad bearings is one of them. The bearing is one of the most elegant and complex devices, and it was precisely this that was developed at the very beginning. Second, the bearing was conceived simultaneously and independently by two men, the other being A. G. H. Michell, of whom more will be said later on.

Although Kingsbury built a model of the tilting pad bearing in 1898, he did not apply for a patent until 1907. The application was at first refused because Michell had patented the bearing in 1905, and it was not till 1910 that Kingsbury was granted a patent. Keeping up his inventive spirit, Kingsbury, though at a later date, was also one of the first to utilize an analog, in this case an electrolytic tank, to simulate flows and pressures and thus obtain a solution for a finite journal bearing.

In his last two achievements, Kingsbury's progress was paralleled by the work of Anthony Michell (1870–1940) of Australia. As already mentioned, Michell independently invented the tilting pad bearing. He was also a skilled analyst and obtained a solution for a finite slider by expressing the pressures in the form of a series, viz.,

$$p(x,z)=\sum_{1,3,5}^{\infty} \frac{f(x)\sin nz}{nx} \tag{7}$$

the function $f(x)$ containing Bessel functions whose coefficients were made to equal zero at the edges of the slider. These

Downloaded 16 Aug 2012 to 165.91.101.108. Redistribution subject to ASME license or copyright; see http://www.asme.org/terms/Terms_Use.cfm

solutions, obtained for $L/B = 3, 1, 1/4$, Michell published in 1905.

It was mentioned that it seems ironic that the tilting pad bearing should have been developed at the very beginning of bearing technology. But a much greater irony lies in the realization that the success of this bearing should have brought the demise of the entire theory of hydrodynamic lubrication. A tilting pad produces a resultant that is off center, and therefore with central pivoting, such a pad is rotated to a position parallel to the runner. However, a parallel surface should, by the very first and basic principle of hydrodynamic theory, produce no pressures and no load capacity. Yet centrally pivoted thrust bearings not only carry a load but have the highest load capacity of all. Such an event ought to have shattered the very foundation of hydrodynamic lubrication. That it did not must surely be ascribed not to science but to faith. To this subject—by no means satisfactorily resolved even today—we shall return later on.

The evolution of the subject into a mature engineering discipline consisted in large measure in trying to solve the Reynolds equation. Equation (2) is a nonhomogeneous partial differential equation with variable coefficients and is difficult to solve analytically; even when solved for special cases, the results are cumbersome to use. One shortcut consisted thus of considering the bearing to be infinitely long, something that has been attempted by Reynolds himself, though unsuccessfully. In this area, the name Sommerfeld occupies in all histories of the subject a most prominent place. Suffice it just to recall that this word relates to the name of a man, a boundary condition, a mathematical substitution, a dimensionless number, and there is even such a thing as a Half-Sommerfeld.

Since the Sommerfeld phenomenon is going to receive here a mixed review, it is important to stress that the criticism relates not to the man and his work but to the indiscriminate use of his approach by his imitators. Also, the fame of Arnold Sommerfeld (1858–1951) does not rest in the slightest on his paper on lubrication. Sommerfeld was a distinguished theoretical physicist who made notable scientific contributions to such fields as atomic structure, quantum theory, spectral analysis, and the theory of relativity. He wrote 276 papers and 13 books. In his midcareer, for some unexplained reason, Sommerfeld picked up the Reynolds equation and solved it for an infinitely long journal bearing. Unlike Reynolds, he went straight ahead and integrated the differential equation and obtained explicit analytical expressions for pressure distribution, load, locus of shaft center, and friction. The boundary condition he used was that of simple periodicity, namely

$$p(0) = p(2\pi)$$
$$\left.\frac{dp}{d\theta}\right|_0 = \left.\frac{dp}{d\theta}\right|_{2\pi} \tag{8}$$

This work Sommerfeld published in 1904. It was his sole paper on and sole venture into lubrication theory.

Some of the features inherent in the Sommerfeld work are as follows:

(*a*) Pressure Profile. The solution gives an antisymmetric pressure distribution about $\theta = \pi$ with negative pressures equal to the positive ones. Since liquid lubrication yields pressures in the tens and hundreds of atmospheres, the solution gives absolute negative pressures of the same order, a physical absurdity.

(*b*) Locus of Shaft Center. The solution gives a constant attitude angle of 90 deg. In reality, as $\epsilon \to 1$, the attitude angle approaches colinearity with the load instead of being normal to it.

(*c*) Load Capacity. Due to (*a*), calculated load capacity is about double its actual value.

(*d*) Friction Coefficient. As obtained from the Sommerfeld approach, f yields a minimum at $\epsilon = 1/\sqrt{2}$. In actuality the friction coefficient keeps decreasing with ϵ as long as hydrodynamic lubrication prevails.

(*e*) Sommerfeld Substitution. Sommerfeld is credited with having facilitated the analytical solution of the one-dimensional Reynolds Equation by the use of the substitution

$$(1 + \epsilon \cos \theta) = \frac{1 - \epsilon^2}{(1 - \epsilon \cos \psi)}. \tag{9}$$

named after him. In fact he used the familiar $\delta = \tan(\theta/2)$ and recurrence formulae for solving the problem.

It is the use of boundary conditions (8) that is responsible for all of the discrepancies listed from (*a*) to (*d*). Sommerfeld, himself, in his paper, mentions and worries about the possible effects of cavitation which he ignored, but not so the imitators that followed him. For, starting with this analysis, scores and perhaps hundreds of papers were written based on the Sommerfeld boundary conditions. They were for the most part mere mathematical exercises, and woe to the engineer who would try to design a bearing or predict its performance from the results of these efforts. This use of the Sommerfeld conditions has remained an established research tradition for a long time and occasionally surfaces even today.

In contrast to journal bearings, most thrust bearings do not experience cavitation, and thus while $L/D = \infty$ solutions may quantitatively be inexact, they are at least qualitatively acceptable. An elegant set of solutions for sliders of various film shapes was derived by Lord Rayleigh (1842–1919). In addition to calculating load capacity, he also obtained optimum values for the "a" ratios, and by the use of the calculus of variations showed that a stepped slider is the best configuration when compared to those with a linear taper, a crowned, or exponential film shape. This work he published in 1918, and what is impressive is that these results are more or less valid also for finite thrust bearings. It is also worth noting that Lord Rayleigh was the first to conceive the idea of hydrostatic bearings, in a paper he published in 1917.

At the turn of the century, Kinsgbury had discovered gas lubrication and in 1913 W. J. Harrison, a fellow at Cambridge University, derived the differential equation for compressible fluid films. Instead of eliminating density from the continuity equation, he retained it under the differentiation signs and then, by using the perfect gas equation under isothermal conditions, he obtained the compressible Reynolds equation in the form of

$$\frac{\partial}{\partial x}\left(\frac{h^3}{\mu}\frac{\partial p^2}{\partial x}\right) + \frac{\partial}{\partial z}\left(\frac{h^3}{\mu}\frac{\partial p^2}{\partial z}\right) = 12\, U \frac{\partial (ph)}{\partial x} \tag{10}$$

Kingsbury's intuition had now received, in parallel to the Tower-Reynolds precedence, a theoretical foundation for the hydrodynamic action of gas lubricants. Moreover, here there was no cavitation to haunt the analyst and the simple periodic boundary conditions applied, since the equation of state guaranteed that the pressures could never fall below absolute zero.

The 35-year period (1890–1925) ended with the conceptualization of two most important features of journal bearings, both dealing with bearing dynamics and stability. The first, made by Stodola in 1925 was the realization that a bearing is not a rigid support but represents rather a set of springs and dashpots whose characteristics have a telling effect on rotor criticals and dynamic behavior. Since that time, bearing stiffness and damping coefficients have become a basic element in journal bearing studies.

The other discovery was that of bearing-induced instability made by Burt Newkirk at the General Electric Research Lab. Encountering shaft vibration which could not be attributed

Downloaded 16 Aug 2012 to 165.91.101.108. Redistribution subject to ASME license or copyright; see http://www.asme.org/terms/Terms_Use.cfm

either to unbalance or to internal friction which he was then investigating, Newkirk turned off the oil supply to the bearings supporting the shaft and discovered that the instability ceased. These results he published in 1925, and from that period dates the great and growing concern about what was originally called oil whip and later generalized to half-frequency whirl. A new and most significant area of hydrodynamic lubrication had thus been discovered and incorporated within its boundaries, with serious ramifications not only for bearings but for machine design in general.

In view of the stagnation that followed the first 40 years of lubrication progress, it is perhaps worth speculating briefly what may have been the forces that accounted for this intense and rewarding activity. Two specific and two general causes may be discerned. One was that mineral oils entered the industrial market in the mid-1880s, just about the time the founding tribologists made their entry. A strong interest in their utilization evoked interest in their properties with regard to viscosity, friction, etc. The other was railroads. It was problems on the railroads that led Petrov to his oil and friction studies; the experiments that Tower performed were done on railroad bearings; Kingsbury, at one time, was a consultant to Canadian Railways; and most interesting of all, it was while working on braking problems of railroad cars that Sommerfeld ventured into his famous lubrication paper.

More generally, the period was one of political stability—there had been no major European conflict from the Franco-German War in 1870 until the outbreak of World War One in 1914. And it was a period of unprecedented scientific bloom in physics and chemistry. Electricity and electronics were born then; so was the internal combustion engine and the airplane; and all the modern concepts of physics—quantum theory, atomic physics, and relativity—saw their dawn in those years. Hydrodynamic lubrication was one of the lesser but still vigorous offsprings of this scientific high tide.

The Doldrums: 1925–1945

A curious void seems to stare at us from the 20-year period between the end of the First World War and the end of the Second. Speculating about the possible causes of this regression, one could cite here the Great Depression that set in in 1929 and was not really over until the Second World War; the turmoil caused by the two world wars; and the political and intellectual dark ages that the dictatorships had inflicted on Europe in that period. It was not a brilliant era for science and free-thought in general and tribology seems to have shared in the general decline.

There was only one outstanding new name during that interval, that of Herbert W. Swift (1894–1960). He was the man who formulated fully the Reynolds equation as it applies to dynamic loading and by extension to problems of hydrodynamic stability (Swift 1932, 1937). For his solution of dynamically loaded journal bearings, he used the Sommerfeld approach arguing that the changes occurred so fast that there was no time for the cavitation bubble to collapse and reform in phase with the changes in load direction. In fact, the question of cavitation at high frequencies is something that is still not completely resolved, involving as it might inertia effects which the Reynolds equation ignores. Swift also finally nailed down the question of the trailing boundary conditions in diverging films by showing that $p = dp/d\theta = 0$ is a requirement of both continuity and the minimum potential energy principle.

Other than the aforementioned exception, the theory of hydrodynamic lubrication in the 20 years between the two world wars stayed in the doldrums, and to such a degree that in the scientific community few were aware of the existence of such a branch of science.

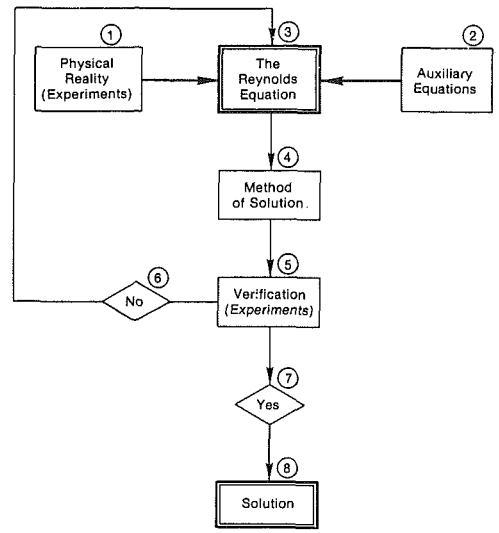

Fig. 3 Research loop in hydrodynamic lubrication

Renaissance: 1945–1965

Within a few years of the end of the Second World War, there followed a reawakening and bloom of tribological activity which constitute probably the peak of its history to date. While the previously suggested causes for the ups and downs in tribological progress are somewhat tentative, there is little doubt as to what triggered its unprecedented growth during the years following 1945. Two technological developments stand out as triggers. One was the advent of modern computers, whose impact is sufficiently familiar to need no further elaboration. The other event was the space age. These two developments together brought about a veritable renaissance in the life of tribology.

The flow of research work as it affects the development of a viable body of theory can be portrayed by means of the block diagram of Fig. 3. While such a portrayal may hold for all fields, in one respect perhaps the course of the theory of hydrodynamic lubrication may differ from other sciences, and that is in the importance of Box 1. It is not merely that experiment ought to corroborate theory—true of all science—but also that often it must lead it. In many instances, it alone can provide the inputs and boundary conditions for the proper formulation of the physical problem and be a guide as to what terms can or cannot be dropped.

The Reynolds Equation. Equation (2), as written down by Reynolds, is unnecessarily restrictive. It can be fleshed out to account for a number of phenomena that are a part of modern tribological systems. In tensor notation this expanded Reynolds equation can be written in the following form:

$$\nabla \cdot \left[\rho G \frac{h^3}{\mu} \nabla p\right] = 6\left\{U \frac{\partial}{\partial x}[\rho h] + 2\rho\left[\frac{\partial h}{\partial t}\right]\right\} \tag{11}$$

The meaning of the new terms in equation (11) is spelled out in Table 1. It is the need to account for phenomena such as turbulence, elastic deflections, and temperature variation that accounts for the presence of Box 2 in Fig. 3. Perhaps the omission of inertia effects from Table 1 may seem arbitrary. But a scrutiny of analyses that have evaluated the impact of inertia effects in hydrodynamic lubrication will show that despite the many valiant attempts to prove their importance, inertia effects have only a second order effect, if that much. It is a comforting thought because it was claimed that the Reynolds equation remains the sovereign expression of the theory, whereas had inertia proven its importance, it would have amounted to no less than an overthrow of the Reynolds regime.

Downloaded 16 Aug 2012 to 165.91.101.108. Redistribution subject to ASME license or copyright; see http://www.asme.org/terms/Terms_Use.cfm

Table 1 Significance of terms in equation (11)

Symbol	Applicability	Additional Equations
ρ	Density Variation • Gas Bearings • Compressibility Effects	Equation of State
$h(x,z)$	Variations in Film Thickness • Misalignment • Elastic Deformation • Thermal Deformation	Elasticity Equations
G	Turbulence Effects	Turbulence Coefficients
$V=\left(\frac{\partial h}{\partial t}\right)$	Normal Velocity • Squeeze Film • Dynamic Loading • Instability	Rotordynamic Equations
μ	Viscosity Variation • Thermal Effects • Rheological Fluids • Transverse (y) Variations	Energy Equation $\mu=\mu(T, p)$ Heat Transfer Equations Rheological Models

As stated before, the analytical solution of the Reynolds equation is difficult, and it is here that comptuers have wrought a veritable revolution. But before we chart the rapid advance of finite bearing solutions, it is important to note the story of the $L/D = 0$ solution. The idea of an infinitely short as opposed to an infinitely long bearing first occurred to Michell who, in 1929, suggested dropping the first instead of the second term in the Reynolds equation to make it read:

$$\frac{\partial}{\partial z}\left(\frac{h^3}{\mu}\frac{\partial p}{\partial z}\right)=6\,U\frac{dh}{dx} \tag{12}$$

Cardullo, in 1930, actually went ahead and integrated the above expression for the pressure distribution. It is a fitting comment on the lethargy prevailing in that period that no one picked up the hint to carry the analysis forward. It was not until 1952 that Ocvirk provided a detailed and full solution to the problem of short bearings. It is a most simple, compact, and elegant solution which for analytical manipulations is without peer. And despite its label of infinitely short, it is pretty much valid to L/D ratios of up to 1/2, which is the design range of most modern bearings. On the other hand, it is important to note the restrictions of that solution which are often overlooked. The method cannot be used for bearings whose fluid film does not start at h_{max}; it cannot be used for pads with arcs less than 180 deg; and it cannot be used at all for sliders and thrust bearings.

Prior to the advent of computers, two important sets of solutions appeared for finite journal bearings. One, by Cameron and Wood in 1949 for full journal bearings ranging from $L/D = \infty$ to 1/4, used Southwell's relaxation method to solve the Reynolds equation; the other, by Sassenfeld and Walter in 1954 for both 360 and 180 deg arcs, used a Gaussian algorithm for solving their finite difference equations. Both sets of solutions involved a prodigious amount of calculation and by their method of solving the differential equation can be considered precursors to the new era characterized by the advent of high-speed electronic computers.

The first use of modern computers in the solution of the finite Reynolds equation using the proper boundary conditions was made by Pinkus in 1956. He obtained solutions not only for circular but also for elliptical and three-lobe bearings for L/D ratios ranging from 1-1/2 to 1/4, as well as for finite sector thrust bearings of various arcs and (R_2/R_1) ratios. A significant aspect of this work was the realization that the whole problem of generating solutions for journal bearings of different geometries and load orientations, including the noncircular shapes, resolves itself to that of obtaining generic solutions for single pads of different values of the parameters L/D, β, θ_L, ϵ, and ϕ, Fig. 4, and then assembling them into appropriate geometries under specified operating conditions.

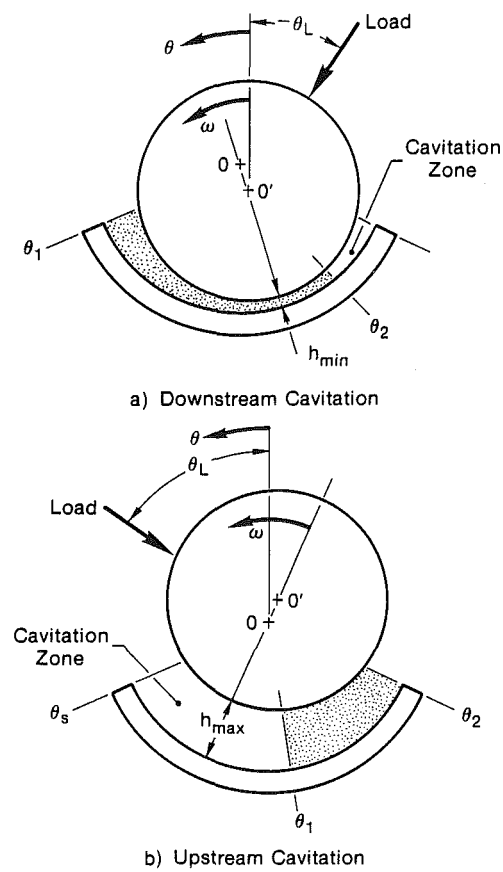

Fig. 4 Basic elements of journal bearings

Within a very short time, a whole spectrum of comprehensive solutions for full and partial journal bearings began to appear for both liquid and gas lubrication. Some of the major contributors here were Raimondi and Boyd who, in 1958, provided most meticulous 360, 180, 120, and 60 deg arc results for L/D ratios of 1, 1/2, and 1/4 for incompressible fluids and, in 1961, results for gas bearings for (L/D)s of 2, 1, and 1/2; Hays (1958) provided full slider solutions ranging from $L/B = 1/8$ to ∞ for values of "a" from 1.2 to 6; Gross (1962) assembled a tabulation of finite gas bearing solutions for various operating conditions; and Castelli and Pirvics (1967) provided solutions for multipad journal gas bearings for L/D

Downloaded 16 Aug 2012 to 165.91.101.108. Redistribution subject to ASME license or copyright; see http://www.asme.org/terms/Terms_Use.cfm

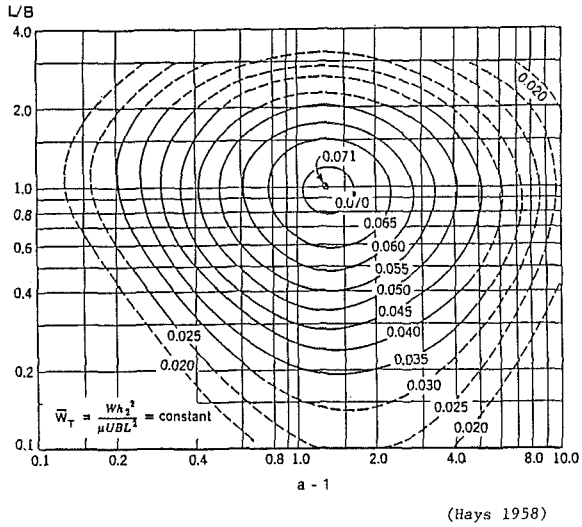

Fig. 5 Performance map of plane sliders

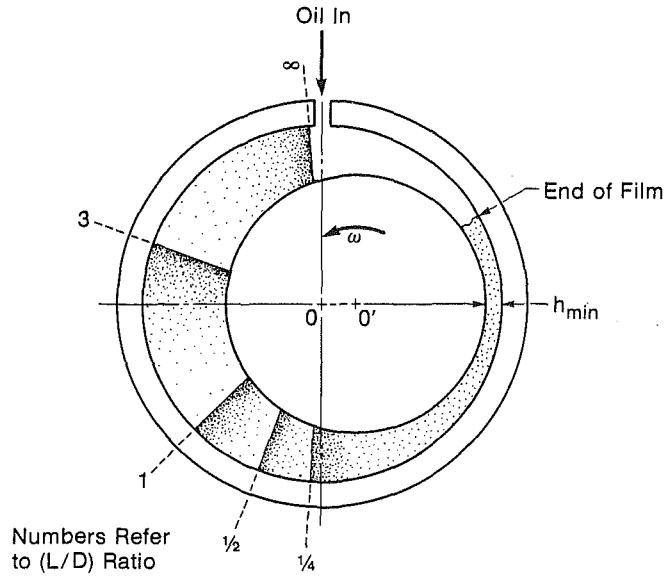

$\theta_1 = f[(L/D), \epsilon, \theta_s, \theta_E]$

Fig. 6 Start of the film for upstream cavitation

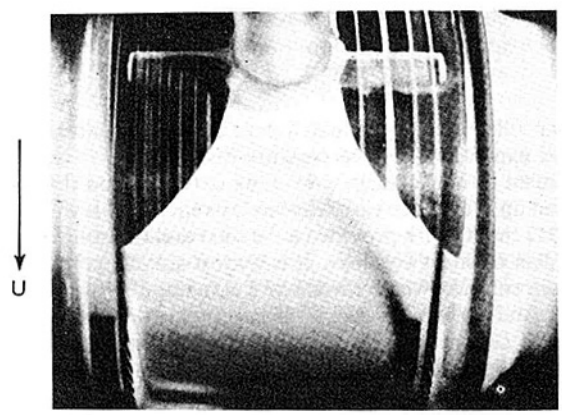

L/D = 1; N = 16.7 Hz; P = 414 kPa
(C/R) = 2 × 10^{-3}; P_s = 3.45 kPa

Fig. 7 Incomplete oil film at inlet to bearing (Cole & Hughes, 1957)

ratios ranging from ∞ to 1/2. Some idea of the thoroughness and scope of these solutions can be gleaned from Fig. 5, taken from Hays' work, which in addition to the substance of the presented data also offers an easy way of determining optimum slider geometry. Numerous other works continued to add to this bank of solutions. But even looking at the above, it is clear that thanks to modern computers a nearly complete spectrum of finite bearing solutions was generated within 5 years, something that measured against the prodigious labor required in the past to achieve a single solution seems almost magical.

Boundary Conditions. It was argued previously that attention to the physical reality has been and remains a particular requirement of hydrodynamic lubrication. Nowhere is this more apparent than in the question of boundary conditions. We have seen how this has plagued the trailing boundary conditions. No sooner was this resolved than the question of the start of the hydrodynamic film came to preoccupy the researcher. Two complications often arise in this connection. One is that shown in Fig. 4(*b*) where the diverging portion at the beginning of the pad causes upstream cavitation. In most cases when confronted with such solutions researchers assumed a full film from the beginning but when the diverging portion is large it can introduce serious errors. The correct boundary condition for determining the start of the hydrodynamic film in diverging spaces was formulated by Floberg in 1961 as

$$\frac{Uh_1}{2} - \frac{h_1^3}{12\mu}\left\{\frac{\partial p}{\partial x} - \frac{\partial p}{\partial z}\left(\frac{dx}{dz}\right)\right\}\Bigg|_1 = \frac{Uh_s}{2} \qquad (13)$$

The location of the starting line will thus depend on the (L/D) ratio, θ_s, ϵ, and ϕ. How widely such starting lines may differ from each other is shown for the case of a full bearing in Fig. 6.

The other complication noted in the meticulous experiments conducted by Cole and Hughes in 1957 is that shown in Fig. 7. Due to either low supply pressure or insufficient axial extent of the oil groove there is initially only a partial fluid film in the axial direction. This experimental observation led to the formulation of corresponding solutions for an incomplete film, and, more broadly, to analyses of starved bearings, discussed later on.

Elastohydrodynamics. In 1916 Martin first applied hydrodynamic theory to gear teeth, but his approach gave such unrealistically small film thicknesses that one was ready to abandon the postulate of the existence of a fluid film in gears and similar devices. It was physical evidence that assured the survival of the concept of hydrodynamic action in gears. Careful observation revealed that machining marks in the contact areas of gear teeth remained visible even after prolonged usage, making it unlikely that there was metal-to-metal contact. There were two difficulties with the Martin approach; the assumptions of rigid surfaces and of constant viscosity. A turnabout occurred in 1949 when Grubin discarded both of these restrictions. He accounted for surface deflection, and he incorporated the appreciable rise in viscosity with pressure. As a result, film thicknesses were obtained which corresponded to measurements. Soon thereafter, in 1951, Petrusevich obtained solutions which included the elasticity equations and, in the process, discovered the essential and typical shape of elastohydrodynamic pressure profiles, shown in Fig. 8.

Starting in 1959, Dowson and others then produced a series of works in which elastohydrodynamic problems were solved by the simultaneous use of the Reynolds and elasticity equations, often even coupled with the energy equation. A whole spectrum of new tribological devices, such as pumping rings,

Downloaded 16 Aug 2012 to 165.91.101.108. Redistribution subject to ASME license or copyright; see http://www.asme.org/terms/Terms_Use.cfm

rubber bearings, and foil bearings, appeared which required the application of elastohydrodynamic theory.

Turbulence. The conceptual picture of lubricant flow in narrow gaps dates back to G. I. Taylor, who in 1923 devised the criteria for the onset of turbulence for two concentric cylinders, but its specific link to bearings does not start until the 1950s. In a series of experiments with 8-in. journal bearings Wilcock (1950) discovered that their performance was seriously altered when operated in the turbulent regime. The difficulty with the development of a rational approach to turbulence in lubrication is linked to the general state of this branch of science, which is still in a state of uncertainty. Within these limitations, Constantinescu (1959), using Prandtl's mixing length concept, and Ng and Pan (1965), using the notion of eddy viscosity, formulated some workable schemes for incorporating the effects of turbulence into the calculation of bearing performance. These are the "G" factors appearing in equation (11).

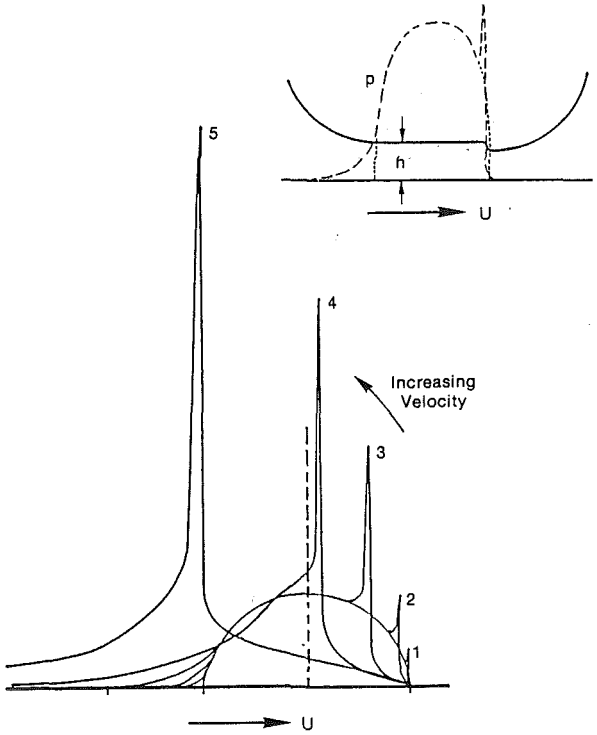

Fig. 8 Typical shapes of elastohydrodynamic films and pressure profiles

Dynamic Loading. One of the few contributions of the stagnant 1925–1945 period was that of dynamic loading by Swift, who, it will be recalled, used the Sommerfeld conditions in his solution. This work was refined in 1947 by Ott in Switzerland who dropped the negative pressures from his solutions and then obtained a most comprehensive spectrum of shaft orbits for various modes of loading. This work was soon supplemented by Burwell, who at first, in 1948, used the same approach as Swift but then went on in 1957 to obtain solutions based on short bearing theory. It was of some interest to note that the results were qualitatively similar for both infinitely short and infinitely long bearings although this was due more to the retention of the negative pressures in both cases than to anything else.

At about 1964, a new concept of treating dynamically loaded bearings made its appearance. Booker first presented this approach in October 1964 calling it the "mobility" method. In

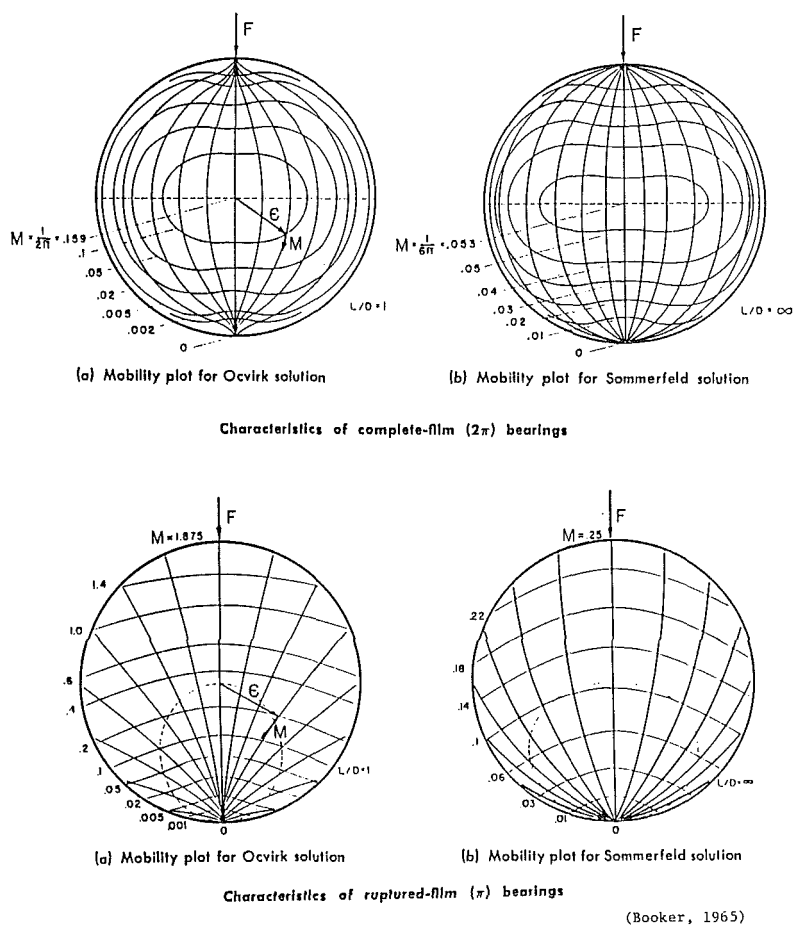

(Booker, 1965)

Fig. 9 Plots of vector M in mobility method

Downloaded 16 Aug 2012 to 165.91.101.108. Redistribution subject to ASME license or copyright; see http://www.asme.org/terms/Terms_Use.cfm

it, a mobility vector **M**, defines the locus of both ϵ and ϕ. Unique maps of **M** for a given bearing geometry can then be constructed, such as shown in Fig. 9, which permits the plotting of the shaft orbit according to

$$\frac{d\epsilon}{dt} = \bar{W}\,\mathbf{M}(\epsilon,\phi,L/D) + \mathbf{W}\times\epsilon \tag{14}$$

where $d\epsilon/dt$ is the velocity of the journal center, as seen by an observer rotating with the load. Orbits can then be obtained by marching in time from some $\epsilon = \epsilon(0)$ without the need for laborious iterations involved in the conventional solution of the Reynolds equation.

It seems that a similar concept called the Impulse Method was arrived at simultaneously by Blok in 1964–1965, which goes beyond the mobility method in that it yields additional bearing information not obtainable from a routine application of the mobility method. Both of the above methods have proven to be of particular use when dealing with highly irregular force diagrams, such as those that occur in the bearings of internal combustion engines.

Instability and Rotordynamics. There are at least three elements underlying the topic of hydrodynamic stability of bearings. The first and simplest one is that of dynamic properties of the fluid films, postulated by Stodola in 1925. Pestel in 1954 was among the first to evaluate both the colinear and cross-coupling spring and damping coefficients of journal bearings, to be followed by numerous others who covered the entire spectrum of bearing geometries for both liquid and gaseous lubricants. Simultaneously with Stodola's contribution, Newkirk discovered the phenomenon of bearing-induced vibration. This hydrodynamic instability, originally named oil whip and later generalized to both liquid and gaseous fluid films by the name of half-frequency whirl, is a much more complex phenomenon. Throughout the 50s and 60s, valiant attempts were made to formulate the problem mathematically and relate it to experimentally observed system behavior. The earliest efforts were those by Hagg in 1946 and by Tondl in 1957, to be followed by a number of contributions from 1962 onward by Sternlicht who studied the stability of both liquid and gas lubricated bearings. It soon became clear that the bearings could not be studied in isolation from the rotor characteristics. This then gave rise to rotordynamics as the subject is understood by tribologists. In its simplest form, this calls for a solution of the combined system represented by the following two differential equations.

$$\begin{aligned} M\Delta\ddot{x} + B_{xx}\Delta\dot{x} + K_{xx}\Delta x + B_{xy}\Delta\dot{y} + K_{xy}\Delta y = 0 \\ M\Delta\ddot{y} + B_{yy}\Delta\dot{y} + K_{yy}\Delta y + B_{yx}\Delta\dot{x} + K_{yx}\Delta x = 0 \end{aligned} \tag{15}$$

where $\dot{x} = dx/dt$, $\ddot{x} = d^2x/dt^2$, and the eight bearing dynamic coefficients, K_{ij} and B_{ij} have to be obtained from a solution of the Reynolds equation.

Much pioneering work in rotordynamics was done by Lund who, starting in 1965, has done basic work in conceptualizing the interaction of stiff and flexible rotors with the bearings in determining stability. These concepts Lund developed to a point where they are now a part of routine dynamic studies of rotor systems. A large number of specific stability maps for various bearing configurations was subsequently worked out by Allaire (1980) and his associates at the University of Virginia.

To sum up, the years 1945 to 1965 were a period of unprecedented accomplishments and maturation of the theory of hydrodynamic lubrication. The Reynolds equation in its finite form and with the correct boundary conditions was solved for nearly any bearing configuration for both liquid and gas lubricants. Gears, rolling element bearings, and traction drives received a workable and solid theory to calculate performance. Bearings linked to rotordynamics provided a new methodology for the correct evaluation of the stability of rotor systems. The vitality of that period could be felt at the various professional conferences and symposia, characterized by large attendance and vigorous discussions. Government and corporate sponsorship of research projects was generous. The number of papers and books on the subject proliferated. The production of sophisticated algorithms for the solution of complex sets of differential equations was something that would have done pride to any mathematician. Even the name lubrication, which smacked of the hotbox and factory oil can, was changed to that of tribology (from the Greek "tribein" meaning "to rub"), a quantum jump in respectability. It was indeed a golden period.

The Contemporary Scene: 1965–1986

As compared with the previous periods for which time has performed its screening job to leave us a body of works that can be said to constitute the fabric of hydrodynamic theory, such a selection is much more difficult for recent times. Also, whereas in the past hydrodynamic theory can be said to have held the center of attention, with lubricants, materials, etc. constituting satellites of lubrication theory, with the redefinition of lubrication as an interdisciplinary science, hydrodynamic theory became simply one among several. The extraction of the pure fluid dynamics aspect of lubrication from the body of tribological research has become a much more nebulous undertaking. Thus, while it has not been easy to detect and attribute a pattern to the past, to do so for the present is risky indeed.

What will be attempted here is to note, in a tentative manner, some of the new areas that have opened up in the framework of hydrodynamic theory of lubrication, as well as some of the failings that have characterized our most recent efforts. While the hazards of such premature scrutiny are high, so are the potential benefits because any perceived shortcomings can perhaps still be remedied. Not even tribologists could do that for the past.

Areas of Progress.

Hydrodynamic Seals. The injection of hydrodynamics into seals is aimed primarily at separating the mating surfaces so as to minimize wear. It is an extra bonus, and a large one, when some designs in addition also manage to prevent leakage of the sealed fluid that the presence of a film normally entails. This is often achieved by having the hydrodynamics of the seal arranged so that the fluid is pumped back to the high-pressure side.

The early interest in seal hydrodynamics goes back to Nau (1964, 1968) who observed cavitation and inward pumping in seals, obviously due to nonparallelism between the surfaces and thus the generation of hydrodynamic pressures. Seal hydrodynamics were then thoroughly analyzed by Findlay (1968, 1969) who delineated both the dynamics of the cavitation bubble and the mechanism of inward pumping. The latter Findlay showed to be due to a combination of planar misalignment and radial mismatch, or eccentricity, of the runner center vis-a-vis the face of the seal. Figure 10 shows the shape of the resulting cavitation bubble with its proper upstream and downstream boundary conditions (based on short-bearing theory). This result is of considerable interest not only for the technology of seals but also for bearings lubricated via circumferential grooves in which case the nonpressurized bearing edge would run along the centerline of the seal, the cavitation in such a bearing having the shape of a symmetrical half of the bubble in Fig. 10.

Following this pioneering work, a number of analyses followed, of which that of Sneck and McGovern (1973) dealt with the spiral-groove face seal particularly suitable for producing inward pumping; and by Lebeck who starting in 1978

Downloaded 16 Aug 2012 to 165.91.101.108. Redistribution subject to ASME license or copyright; see http://www.asme.org/terms/Terms_Use.cfm

provided a series of analyses on the effects that waviness will produce in face seals, often including surface roughness and wear.

Surface Roughness Effects. By the nature of the manufacturing process, all materials exhibit surface irregularities. One of the early papers to deal specifically with the effects of surface roughness on hydrodynamic lubrication was that by Tzeng and Saibel (1967) who, solving the problem for the case of a slider, obtained a 30 percent boost in load capacity due to the irregularities. The conditions that led to this result were as follows:

- A roughness peak of the same order as h_{min} was assumed
- The effects of longitudinal roughness were ignored
- Cavitation was ignored.

A number of subsequent analyses, such as the very solid work by Christensen and Tonder (1971), took the same approach, that is they used either one-dimensional configurations or ignored the mutual effects of the x and z perturbations. However, Sun and Chen (1977) produced an important paper showing the constraints that must be heeded in dealing with such a nebulous subject as surface roughness. They pointed out that in machined surfaces the peaks are usually an order of magnitude less than the hydrodynamic film thickness, whereas the wavelength is of the same order. Two conclusions follow: the effect of the roughness in normal films is bound to be small compared to the wedge effect, and the Reynolds equation cannot be used for asperities whose heights are of the same order as h; it would be rather the Stokes equation that applies to such cases. Sun (1978) also showed that the solution depends very strongly on the correlation factor, which in essence reflects the interdependence of the irregularities in the x and z directions and ignoring this factor is bound to lead to serious error.

Elrod (1973) was on much safer ground when he introduced the effects of surface roughness in gas films which of course are much thinner and are free of the problem of cavitation. Elrod clearly separated the two families of solutions, the Stokes regime when $(\lambda/h) \ll 1$ and the Reynolds regime when $(\lambda/h) \gg 1$. Still, complications multiplied when Lebeck in 1980 while confirming that one-dimensional solutions fail to represent the true dynamics of rough surfaces, also showed that, given the finicky nature of the topography, the very mapping of the finite difference grid vis-a-vis the asperities network affects considerably the solution.

Now the major problem with the above analyses for liquid lubricated seals and bearings is the assumption of a complete film. If the troughs are short, then most likely circulation is set up there. If they are relatively long, then we are dealing with cavitated regions. It was Walowit and associates who provided solutions including cavitation. In one paper (1966), there is a photographic evidence of cavitation in parallel surface seals and a formulation of the asperity problem; and the 1969 paper

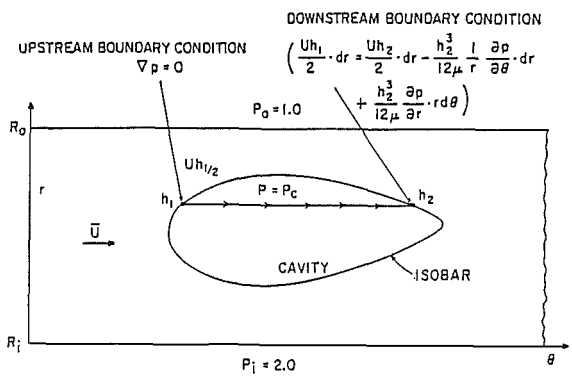

Fig. 10 Cavitation bubble in submerged element

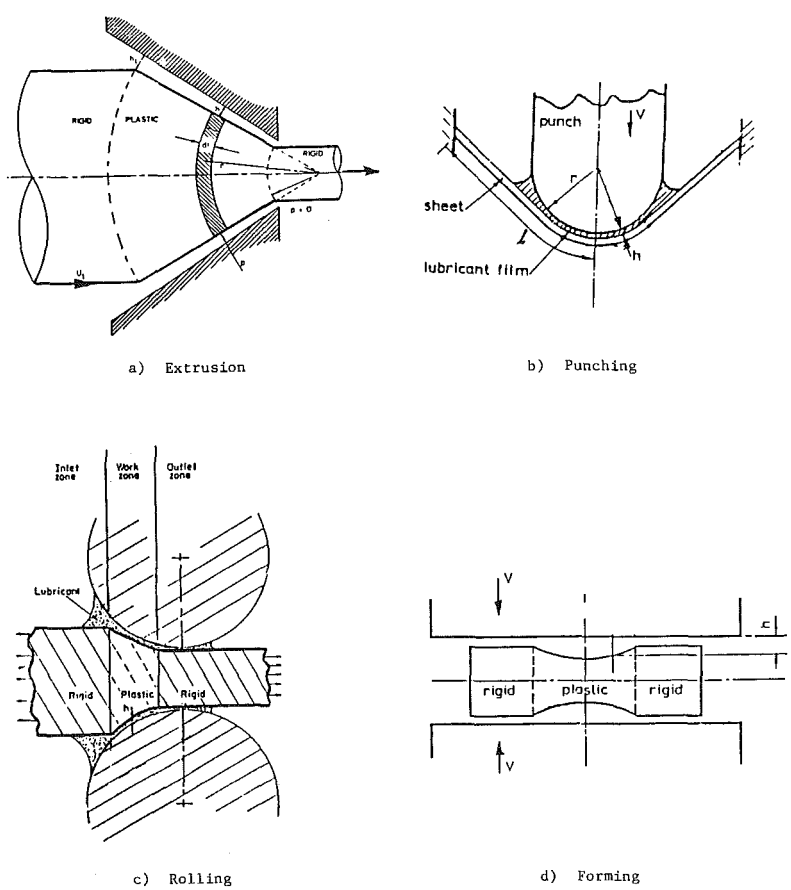

a) Extrusion

b) Punching

c) Rolling

d) Forming

Fig. 11 Basic forms of metalworking

Downloaded 16 Aug 2012 to 165.91.101.108. Redistribution subject to ASME license or copyright; see http://www.asme.org/terms/Terms_Use.cfm

provides, in addition to sample cases, the following expression for the asperity-produced pressure

$$p_{av} = \frac{3}{4}\left(\frac{\mu U r_0 \gamma}{h^3}\right) \tag{16}$$

where γ is the slope of the asperity over a distance equal to its radius r_0.

Metalworking. Metalworking could properly be considered a part of EHD or perhaps vice versa, and in fact the early ventures into this field treated it as such. However, metalworking, some forms of which are shown in Fig 11, entails new elements such as variable surface velocities or the variation in the geometry and physical properties of the workpiece, to name just a few. The idea of a hydrodynamic fluid film in wire drawing goes back to Christopherson and Taylor (1955) who postulated its existence without specifying the origin of this fluid film. Subsequent analyses such as Tattersall (1961) and Cheng (1966) did provide analyses of the formation of such a film but more or less within the confines of conventional EHD theory. Much pioneering work in proper metalworking lubrication was done by W.R.D. Wilson. The Wilson and Walowit (1971) paper analyzed strip rolling and showed the dominant role played by the inlet zone in the whole cycle. In a discussion to the above which itself nearly amounts to a paper, Haines (1971) showed that there could be no neat separation between the elastic and plastic zones and provided expressions of how this affects the velocities and, therefore, the hydrodynamics of the film in the "bite" zone. The process of forging was next analyzed by Osakada and Oyane (1970) to be followed by Wilson and Wong (1974) who included the effects of variable viscosity. The extrusion process originally treated by Tattersall was taken up by Snidle et al. (1975) who included thermal effects due to work expanded on plastic deformation. A much advanced model of strip rolling was produced by Wilson and Murch (1975) who included the effects of backflow and slip between the surfaces. The complexity of many of these processes, can be gleaned from the fact that in the relatively simple case of sheet stretching there are four possibile lubrication regimes. While clearly much remains to be done, still the recent contributions provide sufficient insight and a valid analytical methodology for a reasonable treatment of hydrodynamic lubrication in metalworking processes.

Starved Bearings. It has been pointed out before that due to geometrical constraints some films are incomplete at the inlet to the bearing. Such deficiencies can, of course, be remedied but in many cases lubricant starvation is an inherent feature of the system. Any jet-wick- or oil-ring-lubricated bearing will operate under starved conditions as will, in most cases, a floating ring bearing whose inner film receives its lubricant across the rotating element. Starvation is simply that condition when $Q_1 < Q_{1f}$, Q_{1f} being the inlet flow required to maintain a full film. The equation that formulates the problem then is:

$$Q_1 = \int_{-L/2}^{L/2} \left\{\frac{h_1 U}{2} - \frac{h_1^3}{12\mu R}\left(\frac{\partial p}{\partial \theta}\right)_{\theta_1}\right\} dz \tag{17}$$

where Q_1 now constitutes a new independent input.

Constantinescu in 1977 considered the problem in qualitative terms for converging, diverging, and cylinder-plane configurations using one-dimensional models. It was Bayade (1983) who supplied a solution for finite journal bearings as a function of various values of Q_1. This was for isothermal conditions. Two subsequent papers by Artiles and Heshmat (1985, 1986) supplied starved bearing solutions for finite journal and thrust bearings with viscosity variations taken into account, which, given the thinness of the fluid film at low values of Q_1, can have a considerable effect on the dynamic coefficients. Finally, Hayasaki and Wada (1985) obtained results for starved floating ring bearings showing that starvation of the inner film increases the stability of the bearing while starvation of the outer film produces an opposite effect.

Stalled Efforts. There are a number of areas in hydrodynamic theory where the times have not kept up with the needs. Of these, only four areas will be mentioned and, given the constraints of a review such as this, the discussions will be the briefest of the brief.

The Thermal Problem. By far the most urgent of the unhappy areas is that of thermohydrodynamics. Yet this is one of the crucial elements of lubrication theory because variable viscosity not only affects profoundly the performance of tribological devices, but it alone can provide the value of T_{max}, one of the two criteria, along with h_{min}, of bearing or seal failure. When one looks back at the prosperous 1950s and 1960s one discovers that the accomplishments of that period are largely confined to isothermal solutions. What is meant by this is that, given any bearing problem, one can find in papers and textbooks the desired solutions. No such data exist for anisothermal problems. Not that there is a shortage of works on the subject. The 1979 Proceedings of the Leeds-Lyons Conference on "Thermal Effects in Tribology" alone contains 28 papers on the subject, with its lead article offering a bibliography of 118 references. The list is incomplete and scores of papers have appeared since then. However, when examined carefully, that great body of analyses proves to be haphazard in content and contradictory in its claims and results. If one needed an ansiothermal solution it would be difficult to tell to which of the hundreds of papers in existence to turn to to obtain a reasonable answer.

An attempt to show the nature of this disarray was made recently by Pinkus (1985). To quote an example, this paper cites the case of a simple slider taken from two different works with, in one case, the film temperatures penetrating a distance of one film thickness into the bearing metal, whereas in the second case, it penetrates to a depth 1000 times as large—the difference being due to different initial postulates. Not even the subject of pad inlet temperature resulting from mixing the hot carry-over oil and cold supply oil has been resolved—and, formally, this is no more than a thermal boundary condition.

Now the reasons for this disarray are in part objective and the difficulties with thermal analysis, which involves not just the fluid film but the whole assembly, are well known. But in part they are a consequence of the nature of the conducted investigations and a disregard of physical reality. It seems to be the peculiar nature of research on thermal effects that each technical paper and each set of new results, while certainly adding to this subject, at the same time introduces new complexities into the problem. As a result, in place of a steady if slow resolution of the difficulties, the subject is both expanding and becoming more obscure.

Parallel Surfaces and Mixed Lubrication. It was mentioned earlier that the success of the centrally pivoted thrust pad violates the very foundations of hydrodynamic theory. A number of theories have been advanced to explain this contradiction. It was postulated that elastic or thermal distortions bend the pad so as to give it a crown. But the fact remains that very thick pads for which calculations yield negligible deflections and cold pads, for which no thermal bending is likely, work just as well. The operation of parallel surfaces was then attributed by many tribologists to the expansion of the liquid due to heating, the "thermal wedge." But even if real, the contribution of such a wedge yields but a small fraction of the loads these bearings carry. The next panacea was the viscosity wedge. This consisted of assigning to the runner a temperature

Downloaded 16 Aug 2012 to 165.91.101.108. Redistribution subject to ASME license or copyright; see http://www.asme.org/terms/Terms_Use.cfm

Table 2 Some works on Non-Newtonian fluids

Year	Author	Lubricant Model	Bearing Applied to	Effect on Load Capacity
1957	Milne	Viscoelastic	Slider	Increase
1967	Hsu	Pseudoplastic	Journal	Decrease
1971	Allen and Kline	Micropolar	Slider	Increase
1973	Tipei and Rohde	Directional Viscosity	Slider	Increase for short; decrease for long sliders
1978	Harnoy	Viscoelastic	Journal	Increase
1983	Bourgin and Gray	Polymer-Thickened	Journal	Decrease
1984	Buckholz	Rheological	Journal	Decrease

higher than to the bearing and then by assuming a viscosity variation both along and across the film a load capacity was obtained. But the fact is that, in most cases, the bearing surface is hotter than the runner, and this being the case, a viscosity wedge produces suction instead of lift. Thus, neither bending, density, nor the viscosity wedge provides an answer to the problem. Ettles and Cameron (1965, 1966) in a most comprehensive series of tests on parallel surfaces sadly concluded that without bending parallel plates produce a negative load capacity.

What does provide the load capacity? The question is raised rhetorically in order to point out that there is no satisfactory answer to it. The question is perhaps linked to what is called mixed lubrication, a regime partly hydrodynamic, partly boundary lubrication. A number of important tribological devices such as seals, piston rings, pumping rings, and perhaps parallel surfaces operate in that regime. But there has been no methodical investigation, no fundamental experiment on what are the film thicknesses, pressures, and temperatures of such regimes, and, in particular, what are the individual contributions of each regime that would enable one to calculate their composite load capacity.

Rheological Lubricants. Starting with the work of Milne (1957) a number of researchers attempted to evaluate the effect that non-Newtonian lubricants may have on the performance of bearings. Table 2 gives a representative selection of such efforts over the last quarter century or so. This exhibit is meant to point out the diversity of lubricant models employed and the differing effects on load capacity produced by the various analytical approaches. The great uncertainties prevailing in this area are symbolized by a discussor's comments to the Harnoy (1978) paper in which the discussor takes issue with the claim of increased load capacity and provides experimental data, which actually support the paper's conclusions. But rheology is perhaps one area where tribologists should not be wholly blamed for the ensuing contradictions because the origin of the differences lies most likely in the postulated models of the non-Newtonian fluids, an area in which there is a great deal of uncertainty among the physicists.

Biotribology. It is only fitting, and it makes for a harmonious conclusion of this brief review, that biotribology, the youngest offspring of the science of lubrication is something that was first broached by Osborne Reynolds himself 100 years ago. His seminal 1886 paper that started it all ends with the following words:

> "The only other self-acting system of lubrication is that of reciprocating joints with alternate pressure on and separation (drawing the oil back or a fresh supply) of the surfaces. This plays an important part in certain machines, as in the steam engine, and is as fundamental to animal mechanics as the lubricating action of the journal is to mechanical contrivances."

In general, the problem in biotribology is twofold; given the anatomy and physiology of animal joints how to translate them into engineering terms; and then to provide an analytical model that predicts correctly the functioning of a live or replacement joint.

The first papers on the lubrication aspects of animal joints originated, naturally, within the medical profession. One of the earlier papers by a tribologist is that of Dowson (1966, 1967) who saw squeeze-film action as the underlying mechanism of a knee-like joint lubrication. Perhaps a score of papers have since appeared on the subject. Given the fact that interest in this field extends far beyond the small circle of tribologists, that it impinges on such vast, social domains as medicine and public health, it is somewhat disappointing that more has not developed in this area. One would have expected a most lively interaction with the medical profession and a much more active pursuit of the tribologist's skills and knowledge. Yet the level of activity remains dormant with the interests and number of published papers, lagging behind some of the more mundane areas of lubrication theory.

Sum Up. The above paragraphs lead one to the view that the recent period is one of mixed success. Even though, for example, the area of surface roughness has been included as one of progress, it is only optimistically so for in many ways its status is close to our failings in the area of rheology. In a review of this area, Elrod (1977) wrote the following:

> "Although the accomplishments of analysis in predicting the effects of roughness on laminar lubricating films are perhaps encouraging, the work is incomplete, and a number of differences in outlook and results remain to be reconciled."

Lubrication is an engineering discipline and one expects to be able to extract from the fruits of research and analysis a reasonable estimate or solution for the underlying engineering problems. No such answers are easily available either in the thermal field or for the performance of bearings with parallel surfaces or those running with non-Newtonian lubricants. All this, paradoxically, is occurring against a background of great sophistication in the use of mathematical algorithms and computer technology in the tackling of extremely complex analytical problems. It is not lack of effort that seems to be responsible for this state, but rather a disorientation as to what constitutes the aim and purpose of present-day hydrodynamic theory as well as a lack of perseverance in seeing through an issue to its viable resolution. No concerted effort has been made, for example, to establish a hierarchy of sorts among the scores of variables and the multiple possible regimes of thermohydrodynamics so as to reduce the problem to a size and form amenable to some sort of generalized solution. No basic experiments have been conducted to facilitate this and the field is open for any arbitrary postulate, no matter

Downloaded 16 Aug 2012 to 165.91.101.108. Redistribution subject to ASME license or copyright; see http://www.asme.org/terms/Terms_Use.cfm

how far fetched. A survey of the literature over the last 10 to 15 years will reveal the shrinking fraction of experimental works in the total output of papers. Careful, meticulous experiments aimed at investigating a specific phenomenon or a single variable are nearly nonexistent. On the other hand, there is an excessive preoccupation with methods of solution, to the point that some papers offer not results and insights into hydrodynamic theory, but intricacies of programming. Some of this is reminiscent of the post-Sommerfeld era when a sufficient justification for a paper was the success of its mathematics. One even hears the view that the present disorientation is due to the fact that most of the problems have been solved. But if nothing else, the story of our failed efforts in thermal analysis alone should prove the opposite. Whether a reawakening will materialize in time before history imprints on our present era a stamp short of perfection has to be left to some future biographer.

References

Historical Reviews

Archibald, F. R., *Men of Lubrication*, ASLE, Chicago, 1957.
Pinkus, O., "The Science of Hydrodynamic Lubrication: A Brief History," *La Scuola in Azione*, No. 15, E.N.I., Milano, 1962 (in Italian).
Cameron, A., *The Principles of Lubrication*, Chapter 11, Wiley, 1966.
Dowson, D., *History of Tribology*, Longman, London 1977; excerpts in ASME Journal of Lubrication Technology, Vol. 100 (Apr. and Oct. 1978): Vol. 102, (Jan., Apr., July, and Oct. 1980).
Dowson, D., "The History of Tribology in America," ASME Journal of Lubrication Technology, Vol. 103, July 1981.
"Fluid Film Lubrication: A Century of Progress" Edited by S. M. Rohde; ASME Publ. 100162, 1983.

The 1880s

1883 Petroff, N. P., "Friction in Machines and the Effect of the Lubricant," *Inzhenernii Zhurnal*, St. Petersburg, Vol. 1, pp. 71–140; Vol. 2, pp. 227–79; Vol. 3, pp. 377–436; Vol. 4, pp. 435–64 (in Russian).

1886–1887 Petroff, N. P., "Friction in Machines," (a) Izv. St. Pet. Prakt. Teknolog. Inst. (1886) 5:1–438, + 119 pp. tables and 5 pp. graphs and (b) Inzh. Zhur. St. Pet. (1887) 1:83–145, 2:229–88, (in Russian).

1883–1885 Tower, B., "First Report on Friction Experiments," *Proc. Inst. Mech. Eng.* (Nov. 1883): 632–66. "Second Report." ibid. (1885): 58–70.

1886 Reynolds, O., "On the Theory of Lubrication and Its Applications to Mr. Beauchamp Tower's Experiments Including an Experimental Determination of the Viscosity of Olive Oil," *Phi. Trans.*, Vol. 177 (i); pp. 157–234.

1890–1925

1897 Kingsbury, A., "Experiments with an Air Lubricated Bearing," *Journal of the American Society of Naval Engineers*, Vol. 9.

1904 Sommerfeld, A., "Zur Hydrodynamischen Theorie der Schmiermittelreibung," *Z. Math. u. Physik*, Vol. 50, p. 97.

1905 Michell, A. G. M., "The Lubrication of Plane Surfaces," *Z. Math. u Physik*, Vol. 132, p. 123.

1913 Harrison, W. J., "The Hydrodynamical Theory of Lubrication with Special Reference to Air as a Lubricant," *Trans. Camb. Phil. Soc.*, Vol. 22, No. 3, p. 39.

1916 Martin, A. M., "The Lubrication of Gear Teeth," *Engineering*, Vol. 102, p. 119.

1918 Rayleigh, Lord, "Notes on the Theory of Lubrication," *Phil. Mag.*, Vol. 35, No. 1.

1925 Stodola, A, "Kritische Wellenstoerung infolge der Nachgiebigkeit des Oelposters im Lager," *Schweizerische Bauzeitung*, Vol. 85, pp. 265–266.

1925 Newkirk, B. L., and Taylor, H. D., "Shaft Whipping Due to Oil Action in Journal Bearings," *Gen. El. Review*, Vol. 28, p. 559.

1925–1945

1930 Cardullo, F. E., "Some Practical Deductions for the Theory of Lubrication of Cylindrical Bearings," *Trans. ASME*, Vol. 52, pp. 143–53.

1932 Swift, H. W., "The Stability of Lubricating Films in Journal Bearings," *Proceedings of the Institution of Civil Engineers* 233 (1931–1932), pp. 267–88, discussion (1932), pp. 289–322.

1933 Robertson, D., "Whirling of a Journal in a Sleeve Bearing," *Philosophical Magazine*, Series 7, Vol. 15, pp. 113–130.

1937 Swift, H. W., "Fluctuating Loads in Sleeve Bearings," *Journal of the Institute of Civil Engineers*, Vol. 5, pp. 151–95.

1945–1965

1946 Hagg, A. C., "The Influence of Oil-Film Journal Bearings on the Stability of Rotating Machines," ASME *Journal of Applied Mechanics*, Vol. 13, pp. A-211–A-200.

1948 Ott, H. H., "Zylindrische Gleitlager bei instationarer Belastung," Verlag A. G. Leemann, Zurich.

1949 Grubin, A. N., "1949 Central Scientific Research Institute for Technology and Mechanical Engineering," Moscow Book No. 30, English Translation D.S.I.R.

1949 Cameron A., and Wood, L., "The Full Journal Bearing," *Proc. Inst. Mech. Engrs. (London)*, Vol. 161, p. 59.

1950 Wilcock, D. F., "Turbulence in High Speed Journal Bearings," *Trans. ASME*, Vol. 72, pp. 825–34.

1951 Burwell, J. T., "The Calculated Performance of Dynamically Loaded Sleeve Bearings III," ASME *Journal of Applied Mechanics*, Vol. 18, Vol. 73, pp. 393–404.

1951 Petrusevich, A. I., "Fundamental Conclusions from the Contact-Hydrodynamic Theory of Lubrication," Izv. Uzbekist. Fil. Akad. Nauk SSSR 209.

1952 Ocvirk, F. W., "Short Bearing Approximation for Full Journal Bearings," NACA TN2808.

1954 Pestel, E., "Beitrag zur Ermittlung der Hydrodynamischen Dampfungs und Federeigenschaften von Gleitlagern," *Ingenieur-Archiv*, Vol. XXII, No. 3, pp. 147–155.

1954 Sassenfeld, H., and Walter, A., "Journal Bearing Calculations," *VDI-Forschungsheft* (B), Vol. 20, No. 441.

1954 Milne, A. A., "A Theory of Rheodynamic Lubrication," *Kolloid Zeitschrift*, Band 139, Heft 1/2.

1955 Christopherson, D. G., and Naylor, H., "Promotion of Fluid Lubrication in Wire Drawing," *Proc. Inst. Mech. Engineers.*, London, Vol. 169, p. 643.

1956 Cole, J. A., and Hughes, C. J., "Oil Flow and Film Extent in Complete Journal Bearings," *Proc. Inst. M.E.* (London), Vol. 170, No. 17.

1956 Pinkus, O., "Analysis of Elliptical Bearings," *Trans. ASME*, Vol. 78, July.

1957 Pinkus, O., "Analysis of Journal Bearings with Arbitrary Load Vector," *Trans. ASME*, Vol. 79, August.

1957 Tondl, A., "The Motion of a Journal in a Bearing in the Unstable Region of Equilibrium Position of the Center of the Journal," Ninth International Congress of Applied Mechanics, Vol. V.

1957 Milne, A. A., "Theory of Rheodynamic Lubrication for a Maxwell Fluid," Conf. on Lubrication and Wear, Paper 41, London.

1958 Raimondi, A. A., and Boyd, J., "A Solution for the Finite Journal Bearing and Its Application to Analysis and Design-III," *Trans. ASLE*, Vol. 1, No. 1.

1958 Hays, D. F., "Plane Sliders of Finite Width," *Trans. ASLE*, Vol. 1, No. 2.

1959 Dowson, D., and Higginson, G. R., "A Numerical Solution of the Elastro-Hydrodynamic Problem," *J. Mech. Eng. Sci.*, Vol. 1, No. 1, p. 6.

1959 Constantinescu, V. N., "Prandtl Mixing Length In Turbulent Lubrication," *Proc. of the Inst. Mech. Eng.*, Vol. 173, pp. 881–900.

1961 Tattersall, G. H., "Hydrodynamic Lubrication in Wire Drawing," *Journal of Mech. Eng. Science*, Vol. 3, No. 4.

1961 Floberg, L., "Boundary Conditions of Cavitation Regions in Journal Bearings," *Trans. ASLE*, Vol. 4, pp. 262–6.

1962 Sternlicht, B., "Stability and Dynamics of Rotors Supported on Fluid Film Bearings," ASME Paper 62-WA-190.

1962 Gross, W., *Gas Film Lubrication*, Wiley.

1964 Nau, B. S., "Hydrodynamics of Face Seal Films," Paper F5, Second International Conference on Fluid Sealing, BHRA, Canfield, England, April.

1965 Ng, C. W., and Pan, C. H. T., "A Linearized Turbulent Lubrication Theory," ASME *Journal of Basic Engineering*, Sept., pp. 625–88.

1965 Lund, J. W., "The Stability of an Elastic Rotor in Journal Bearings with Flexible Damped Supports," ASME *Journal of Applied Mech.*, Dec., pp. 911–920.

1965 Booker, J. F., "Dynamically Loaded Journal Bearings: Mobility Method of Solution," ASME *Journal of Basic Engineering*, Vol. 87, pp. 534–537.

a. Blok, H., and Herrebrugh, K., "Discussion on Above Paper."
b. Blok, H., "The Orbital Hydrodynamics of Dynamically Loaded Self-Acting Journal Bearings, as Simplified by the Impulse/Whirl Angle Method," English abstract of series of lectures to students of Delft University of Technology in 1964/1965: 1967, 34 pp.

1965–1986

1965–6 Ettles, C. M. M., and Cameron, A., "The Action of the Parallel-Surface Thrust Bearing," *Proc. IME*, Vol. 180 Part 3 K.

Downloaded 16 Aug 2012 to 165.91.101.108. Redistribution subject to ASME license or copyright; see http://www.asme.org/terms/Terms_Use.cfm

1966 Cheng, H. S., "Plastohydrodynamic Lubrication," in "Friction and Lubrication in Metal Processing," *Trans. ASME*, New York, pp. 69–89.

1966 Hamilton, D. B., Walowit, J. A., and Allen, C. M., "A Theory of Lubrication by Micro-Irregularities," ASME *Journal of Basic Engineering*, Mar., pp. 177–185.

1966–7 Dowson, D., "Modes of Lubrication in Human Joints," Paper 12, Lubrication and Wear in Living and Artificial Human Joints, *Proc. Instn Mech. Engrs.*, Vol. 181, Part 3J, p. 45.

1967 Castelli, V., and Pirvics, J., "Equilibrium Characteristics of Axial Groove Gas Lubricated Bearings," ASME *Journal of Lubrication Technology*, Vol. 89, No. 2, Apr., pp. 177–96.

1967 Tzeng, S. T., and Saibel, E., "Surface Roughness Effect on Slider Lubrication," *ASLE Transactions*, Vol. 10, pp. 334–38.

1967 Hsu, Y. C., "Non-Newtonian Flow in Infinite- Length Full Journal Bearing," ASME Journal of Lubrication Technology, July, pp. 329–33.

1968 Nau, B. S., "Centripetal Flow in Face Seals," ASLE Paper No. 68 AM 4B-3.

1968 Findlay, J. A., "Cavitation in Mechanical Face Seals," ASME Journal of Lubrication Technology, Apr.

1969 Findlay, J. A., "Inward Pumping in Mechanical Face Seals," ASME Journal of Lubrication Technology, July.

1969 Anno, J. N., Walowit, J. A., and Allen, C. M., "Load Support and Leakage from Microasperity-Lubricated Face Seals," ASME Journal of Lubrication Technology, Oct., pp. 729–30.

1971 Allen, S. J., and Kline, R. A., "Lubrication Theory for Micropolar Fluids," ASME *Journal Appli. Mech.*, Sept., pp. 645–50.

1971 Wilson, W. R. D., and Walowit, J. A., "An Isothermal Hydrodynamic Lubrication Theory for Strip Rolling with Front and Back Tension," Tribology Convention 1971, Inst. Mech. Engrs., London, pp. 164–172; Also Discussion by Haines, D. J.

1971 Christensen, H., and Tonder, K., "The Hydrodynamic Lubrication of Rough Bearing Surfaces of Finite Width," ASME Journal of Lubrication Technology, July, pp. 324–330.

1973 Tipei, N., and Rohde, M., "Lubricant Fluid Films with Directional Variable Viscosity," General Motors GMR-1334, Jan.

1973 Elrod, H. G., "Thin-Film Lubrication Theory for Newtonian Fluids with Surfaces Possessing Striated Roughness or Grooving," ASME Journal of Lubrication Technology, Oct., pp. 484–89.

1976 Wilson, W. R. D., and Murch, L. E., "A Refined Model for the Hydrodynamic Lubrication of Strip Rolling," ASME Journal of Lubrication Technology, July pp. 353–6.

1976 Snidle, R. W., Parsons, B., and Dowson, D., "A Thermal Hydrodynamic Lubrication Theory for Hydrostatic Extrusion of Low Strength Materials," ASME Journal of Lubrication Technology, April, pp. 335–343.

1977 Constantinescu, V. N., "On Source Starvation Phenomenon in Fluid Film," ASME Journal of Lubrication Technology, pp. 441–8.

1977 Elrod, H. G., "A Review of Theories for the Fluid Dynamic Effets of Roughness on Laminar Lubricating Films," *Proceedings of the Fourth Leeds-Lyon Symposium on Tribology*, Sept., pp. 11–26.

1977 Sun, D. C., and Chen, K. K., "First Effects of Stokes Roughness on Hydrodynamic Lubrication Technology," ASME Journal of Lubrication Technology, Vol. 99, Jan., pp. 2–9.

1978 Sun, D. C., "On the Effects of Two-Dimensional Reynolds Roughness in Hydrodynamic Lubrication," *Proc. R. Soc.* Lond., Series A, Vol. 364, pp. 89–106.

1978 Lebeck, A. O., Teale, J. L., and Pierce, R. E., "Hydrodynamic Lubrication and Wear in Wavy Contacting Face Seals," ASME Journal of Lubrication Technology, Jan.

1978 Harnoy, A., "An Analysis of Stress Relaxation in Elastico-Viscous Fluid Lubrication of Journal Bearings," ASME Journal of Lubrication Technology, Apr., pp. 287–294.

1980 Li, D. F., Choy, K. C. and Allaire, P. E., "Stability and Transient Characteristics of Four Multilobe Journal Bearing Configurations," ASME Journal of Lubrication Technology, Vol. 102, July, pp. 291-9.

1981 Lebeck, A. O., "Hydrodynamic Lubrication in Wavy Contacting Face Seals—A Two-Dimensional Model," ASME Journal of Lubrication Technology, pp. 578–586.

1983 Bayada, G., "Variational Formulation and Associated Algorithm for the Starved Finite Journal Bearing," ASME Journal of Lubrication Technology, July, pp. 435–7.

1984 Wilson, W. R. D., and Wang, J. J., "Hydrodynamic Lubrication in Simple Stretch Forming Processes," ASME Paper 83-Lub-5.

1984 Bourgin, P., and Gay, B., "Determination of the Load Capacity of a Finite Width Journal Bearing by a Finite-Element Method in the Case of a Non-Newtonian Lubricant," ASME Journal of Lubrication Technology, April, pp. 285–290.

1985 Buckholz, R. H., "On the Role of a Non-Newtonian Fluid in Short Bearing Theory," ASME Journal of Tribology, Jan., pp. 68–74.

1984–5 Pinkus, O., "Anisothermal Fluid Films in Tribology," *Israel Journal of Technology*, Vol. 22, No. 2–3.

1985 Hayashi, H., and Wada, S., "Stability of Floating Ring Journal Bearings under Lubricant Starvation," *Proceedgins of the 1985 JSLE International Tribology Conference*, July.

1985 Artiles, A., and Heshmat, H., "Analysis of Starved Journal Bearings including Temperature and Cavitation Effects," ASME Journal of Lubrication Technology, Jan., pp. 1–13.

1986 Artiles, A., and Heshmat, H., "Analysis of Starved Thrust Bearings including Temperature Effects," ASME Paper 85-Trib-17.

Downloaded 16 Aug 2012 to 165.91.101.108. Redistribution subject to ASME license or copyright; see http://www.asme.org/terms/Terms_Use.cfm