Tutorials

TUTORIAL SESSION
on
COMPRESSOR CONTROLS

Tutorial Leader

H. Allan Kidd
Dresser-Rand Company, Turbo Products Division
Olean, New York

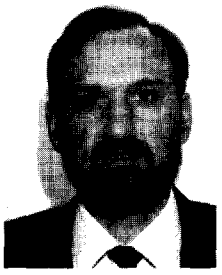

Allan Kidd is Manager of Package Design Engineering at Dresser Rand's Turbo Products Division in Olean, New York. In this capacity, he is responsible for controls and systems engineering associated with the packaging of gas turbine, steam turbine, and motor driven compressors. He has been with Dresser Rand for over 13 years and he has progressed thorough various design engineering responsibilities to his current position. He was awarded a corporate design award for his participation in the development and application of a microprocessor based gas turbine control system in 1983. He holds patents for a NO_x control system and for a low BYU start system, both for gas turbines.

Mr. Kidd published two papers with ASME. He is active in the development of designs for gas seal and magnetic bearing systems.

He graduated from Northeastern University with a BSEE degree in 1971. He is the current ASME IGTI Controls and Diagnostic Committee Chairman and a member of ISA and IEEE.

TUTORIAL SESSION
on
SPRAY COATINGS

Tutorial Leader

Frank N. Longo
Sulzer Plasma Technik
East North Port, New York

Frank N. Longo has extensive worldwide experience in thermal spraying. He has spent the greatest part of his career with the Metco Division of Perkin Elmer, where he held various positions starting as Research Engineer to Senior Manager of materials operations. Mr. Longo is presently in business for himself, offering a consulting service to end users and suppliers.

He has B.S. and M.S. degrees in Materials Engineering from the Polytechnic University of New York. He is a member of ASM International Committee on Thermal Spraying, is past chairman of AWS C-2 Committee on Thermal Spraying. During his 30 year career, he has authored 25 technical papers, has contributed to several ASM and McGraw Hill handbooks and holds 12 patents with two pending.

FLUID FILM BEARING FUNDAMENTALS AND FAILURE ANALYSIS

by

Fouad Y. Zeidan

Staff Research Engineer

Amoco Corporation

Naperville, Illinois

and

Bernard S. Herbage

Vice President of Technology and Programs

Imo Industries, Incorporated

Houston, Texas

Fouad Zeidan is a Staff Research Engineer in the rotating equipment group at Amoco's Research Center in Naperville, Illinois. He conducts applied research on bearings and seals, rotordynamic audits of new and rerated equipment, and vibration analysis in support of the refineries, chemical plants, and production facilities of Amoco subsidiaries. Prior to joining Amoco, he worked for Imo Industries, Centri-Marc Division, where he designed fluid film bearings, conducted rotordynamic analysis studies, and bearing failure analysis. At Qatar Fertilizer Company he worked for five years as a Field Maintenance Engineer and as a Senior Mechanical Engineer in the Technical Services Section, providing engineering support on rotating and critical machinery.

Dr. Zeidan received his B.S.M.E. (1978), M.S.M.E. (1979), and Ph.D. (1989) degrees from Texas A&M University. At Texas A&M, he conducted research on electric shaft currents, rotordynamics, and squeeze film damper bearings.

Bernard S. Herbage, Vice President of Technology and Programs, Imo Industries, Incorporated, is a Registered Professional Engineer, with a B.S.M.E. degree from Bradley University, and was a member Tau Sigma.

The first ten years of Mr. Herbage's career were spent with Allis-Chalmers in the Mechanical Design Sections of its Steam Turbine and Generator Departments specializing on unit sizes through 1000 MW, and specializing on the design, application and testing of high capacity thrust and journal bearings.

For the past 36 years, he has worked with virtually every major high speed rotating machinery manufacturer in the design and application of fluid film thrust and journal bearings. Many of his bearing innovations are now part of numerous OEM machine designs.

ABSTRACT

Fluid film bearing technology is presented in this tutorial as it applies to turbomachinery equipment. The focus here is on the practical aspects of fluid film journal bearings, as opposed to theoretical analysis. Failure modes and the mechanisms leading to these failures will be discussed, along with techniques used to identify and cure them. The influence of different bearing configurations on the dynamics of rotor bearing systems will also be discussed.

INTRODUCTION

Bearings constitute one of the most critical components in turbomachinery. Many problems in high performance rotating machinery can be traced either to the rotating elements and rotor support system, faulty bearing designs, misapplication of a certain bearing configuration, or faulty assembly techniques. Although many problems are first detected at the bearings, the source is not necessarily the bearing. Bearings are by design made more compliant than the rest of the machine elements, and in cases of malfunction or distress, they tend to give first. When a bearing does fail or show signs of wear and distress, it is important for either the rotating equipment engineer or maintenance supervisor to recognize the failure and pinpoint where the fault lies. An understanding of how fluid film bearings work and some of the basic principles that underline their operation is, therefore, essential for making the right decision on a critical piece of machinery. Whether the fault is in the bearings themselves or in other components, modifications of the bearing design parameters has, and continues to be, the most direct and economical means of altering and correcting the fault or malfunction. This fact further adds to their importance particularly in existing machinery.

HYDRODYNAMIC LUBRICATION

The primary requirement of hydrodynamic lubrication is that sufficient oil be present at all times to flood the clearance space between the journal and bearing. The formation of an oil wedge to lift the journal is dependent on the speed, load, and oil viscosity. This is often presented by the ZN/P curve. The curve is shown in Figure 1, and describes three zones of operation a fluid film bearing might operate in. These are:

- Full film hydrodynamic lubrication.
- Mixed film lubrication.
- Boundary lubrication.

Under full film lubrication conditions, no contact takes place between the metallic surfaces. In mixed film and boundary lubrication, the oil film is too thin to separate the metallic surfaces as shown by the illustration in Figure 2. When these surfaces run

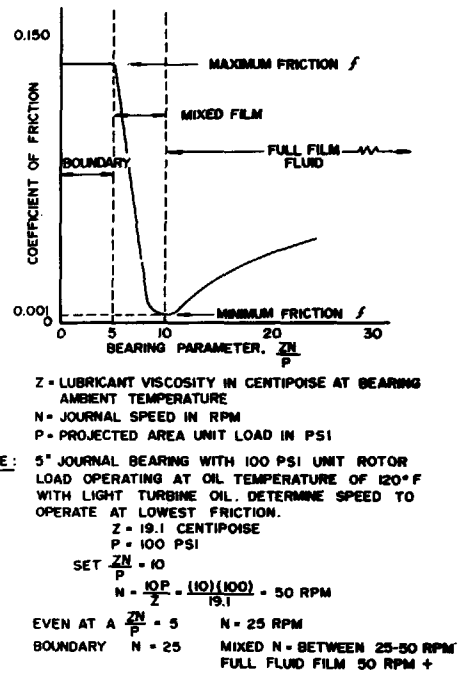

Figure 1. The Classical ZN/P Curve.

together under thin film conditions, the oil is only capable of carrying part of the load, while the remainder is carried by contact between the two surfaces. When less oil is available, or at lower speeds and higher loads, a point is reached where oil plays little or no part. This condition is referred to as boundary lubrication. Boundary lubrication and thin film lubrication are two modes in which friction and wear are affected by properties of the contacting surfaces, and by the properties of the lubricant.

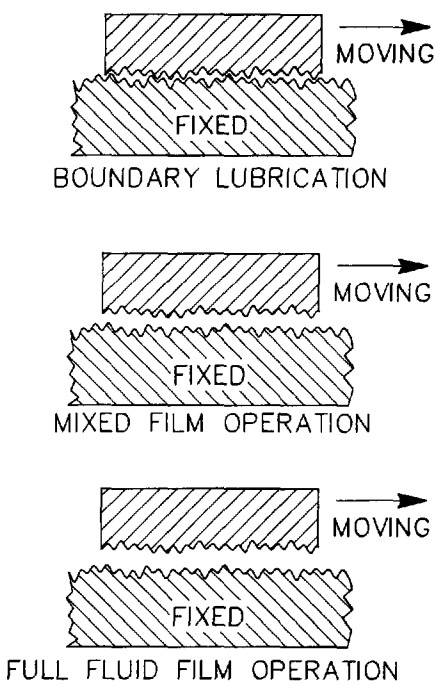

Figure 2. Schematic Representation of the Three Lubrication Regimes.

While the ZN/P curve is not totally satisfactory as an absolute criteria, it illustrates the characteristic coefficient of friction curve plotted directly against speed and viscosity and inversely against the load. Other factors are involved that are not accounted for here such as shaft diameter, surface finish, and cleanliness of the lubricant.

BEARING LOAD

The pressure over the projected area in the bearing is assumed uniform for the purpose of expressing the load capacity of a bearing. The load is, therefore, equal to the average pressure multiplied by the projected area. The projected area being the product of the bearing length multiplied by the bearing width.

In steadily loaded bearings, the load is mainly due to the weight of the rotating element, in addition to the dynamic loading imparted by the unbalance in the rotating components.

In the evolution of turbomachinery, there have been many different types of bearing designs used to achieve acceptable performance. A brief description of a number of significant designs follows, each with an accompanying schematic illustration.

COMMON FLUID FILM JOURNAL BEARINGS

Plain Sleeve Bearings

The plain sleeve bearing still continues to be used extensively because of simplicity and economic justification. The two major classifications are (1) the pressure fed design which receives its lubricant under pressure from an external source, and (2) the self lubricated types such as the oil ring design, the disc lube design, and the viscosity pump design. The oil ring design is the most popular of these.

Pressure Fed Sleeve Bearing

The most common plain journal bearing is shown in Figure 3. It is horizontally split with axial oil distribution grooves along each horizontal joint. Oil is fed to this groove at pressures anywhere from a few inches of Hg pressure to pressures in excess of 30 psig.

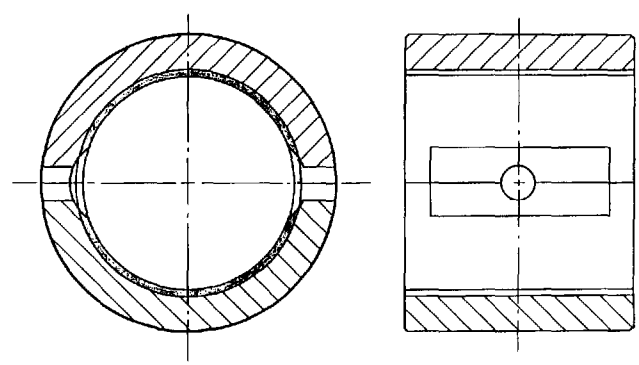

Figure 3. Plain Pressure Fed Sleeve Bearing.

Oil Ring Lubricated

Oil ring bearings are usually utilized in low speed equipment where the load direction is constant and typically downwards. However, their range has continually been extended up to the present limiting journal surface speeds of about 3000 to 4000 ft/min. The rotation of the ring depends on the friction between the shaft and the ring. At low speeds, the static friction between the ring and the journal is sufficient to force the ring to rotate at the same speed as the shaft. At higher speeds, slip occurs and the oil film drag helps drive the ring. The oil lifted from the oil reservoir

as a coating is delivered to the journal largely from the inside surface of the ring by a squeezing action as the ring passes over the rotating journal. Oil rings are used extensively in pillow block bearings, as shown in Figure 4. Lemmon and Booser [1] have investigated several factors that affect ring performance. The depth of immersion, oil viscosity, guides and scrapers, ring material, and ring roundness were all found to affect the performance in different magnitudes. Details of the findings [1] are summarized below.

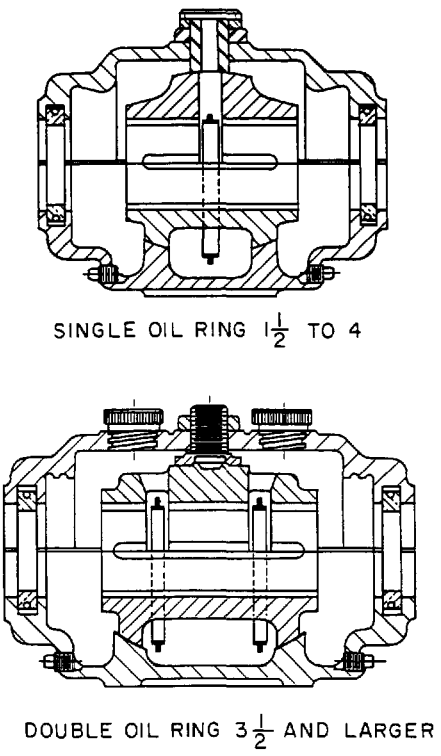

Figure 4. Oil Ring Lubricated Pillow Block Bearing.

Depth of immersion. If the depth of immersion is maintained between the minimum of 10 percent of the ring diameter and 20 percent as a maximum, the tests showed the change in oil delivery is less than 20 percent.

Oil viscosity. As the temperature of the oil increases, its viscosity decreases, and the quantity of lubricant delivered by the ring decreases accordingly. The viscosity of the oil reduces the speed of the ring to a much lesser extent than it affects the oil delivery.

The most significant parameter affecting oil delivery reported by Lemmon and Booser [1] is the use of guides and scrapers. There was several fold increase in oil delivery when guides and a scraper to recover the oil and deliver it to the journal were used. The scraper will slightly reduce the speed of the free running ring. The clearance between the ring and the scraper should be as small as possible and still permit unimpaired operation of the ring at all speeds. A clearance of 0.010 to 0.015 was found to be optimum for the ring sizes investigated [1].

Material and weight. A die cast zinc ring performed better than a ring machined from a laminated phenolic plastic. Heavier rings generally operated better than lighter rings which tend to run on the bearing liner or the housing.

Out-of-roundness. Out-of-roundness up to two percent of the ring diameter has no appreciable effect on ring speed or oil delivery, but larger ellipticities do make the rings swing in a manner which could impair their operation. The out-of-roundness should be established based on the clearances which can be accommodated in the particular bearing configuration.

Grooving. Grooving becomes important if the load is not directly downwards. Side loads are caused by belt pull or gear reaction. In such instances, grooves and chamfers are important, so that the side loading does not block these grooves. Axial grooving and proper chamfering can increase the oil flow to the loaded section of the bearing. Circumferential grooving is sometimes utilized to increase the oil flow.

An advantage with ring lubricated bearings which is often not recognized, is their inherent capability to supply oil to the bearings during a power failure. There is no need for a coast down tank or emergency oil supply. In many installations, they are used in a pressure fed bearing configuration as a back up system during power failures.

Note concerning spherical seat: The only justification of spherical seated bearing construction is to allow the bearings to settle in their natural aligned position during assembly. This type of construction does not allow for alignment when the machine is in operation, a common misconception with such a design configuration.

Multilobe Bearings

These can be made with a number of fixed bearing segments bored to a larger radius than the bearing set clearance thus creating a built in preload. These can be three, four, five, to over ten in number. The lobes can be converging and diverging across each segment or constantly converging across each segment commonly called a tapered land design. A three lobe version with load on pad design is shown in Figure 5. A special type of design uses a plain segment in the loaded quadrant with lobed or tapered segments in the remainder of the bearing.

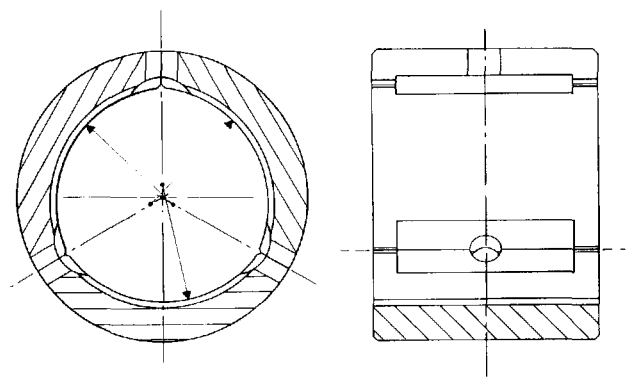

Figure 5. Three Lobe Journal Bearing.

Lemon-Bore Bearings

Shown in Figure 6, this is a special case of the multilobe bearing having two lobes. This suppresses whirl by vertical preload. The tight clearances at the minimum points create higher minimum film temperatures, but the open clearance at the splits provide copious amounts of cool oil. In marginally unstable bearing designs, these can provide satisfactory stability. Obviously this is easy to manufacture by machining to the major bore diameter with shim stock at the horizontal splits.

Offset Half Bearings

This is a unique type of the plain journal bearing. The offset half bearing has the upper and lower halves displaced transverse to the

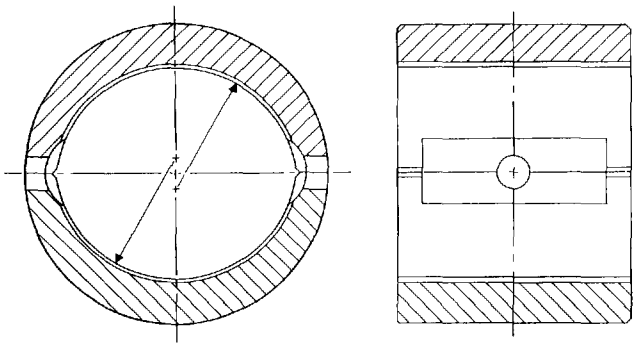

Figure 6. Lemon Bore Journal Bearing.

shaft axis a slight amount at the horizontal split line (usually about one half the radial clearance). While more stable than the plain journal bearing, there is still a tendency for instability. They are usually more effective if clocked at 45 degrees, as shown in Figure 7.

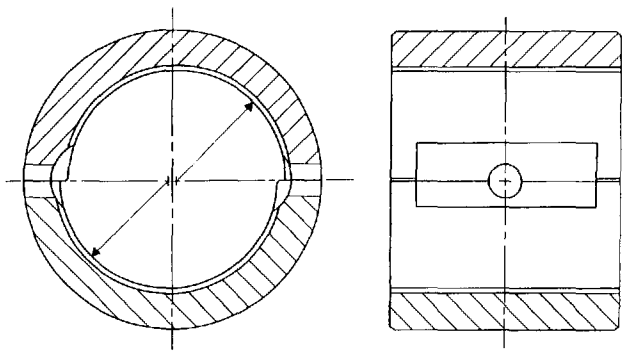

Figure 7. Offset Half Journal Bearing.

Pressure Dam Bearings

One of the most stable fixed geometry bearings available. The pressure dam bearing, shown in Figure 8, is like a plain two groove bearing except it has a relief track machined into the unloaded (usually upper) half. This relief comes to an abrupt sharp edge or "dam." A pressure peak is created at the dam that imposes an artificial load on the journal, thus forcing the shaft into a position of greater eccentricity and consequently, greater stability.

Pressure dam bearings have greater power consumption than plain bearings and are more expensive to manufacture because of the precise machining required to produce the correct dam geometry. Important factors in the effectiveness of this design is the angular position of the dam, the precise depth of the relief track and its width.

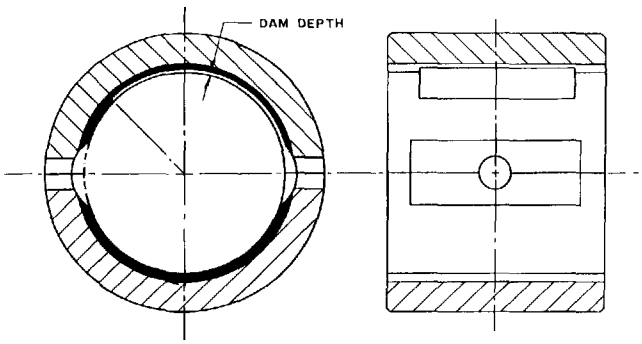

Figure 8. Pressure Dam Journal Bearing.

Tilt Pad Bearings

The tilt pad journal bearing is, at this time, the most stable of all the hydrodynamic fluid film bearing designs available. In the tilt pad design, the cylindrical bearing element is divided into a number of pad arc segments, depending on the shaft load and required bearing dynamic characteristics. Each pad segment is supported and held in circumferential position by an outer housing. To be effective, each pad is free to tilt to form a hydrodynamic converging wedge from leading to trailing edge.

There are three basic types of pad support utilized in tilt pad bearings. The first is the line contact rocker back pad design shown in Figure 9. This design is the simplest and least expensive to manufacture. The pad design allows tilting motion in the circumferential direction but none axially. Since the support contact is a line, the pivot stresses may be high especially if a good alignment is not achieved. An example of misalignment effect can be seen in Figure 10.

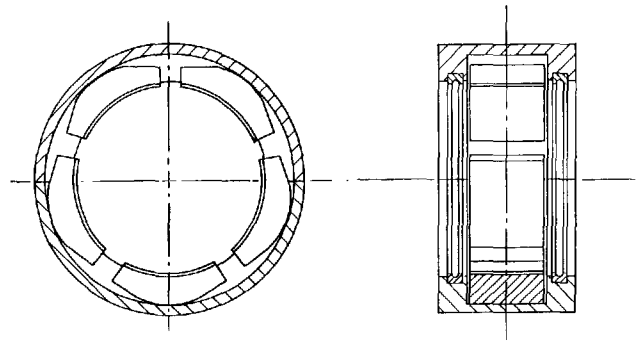

Figure 9. Rocker Pivot Tilt Pad Journal Bearing.

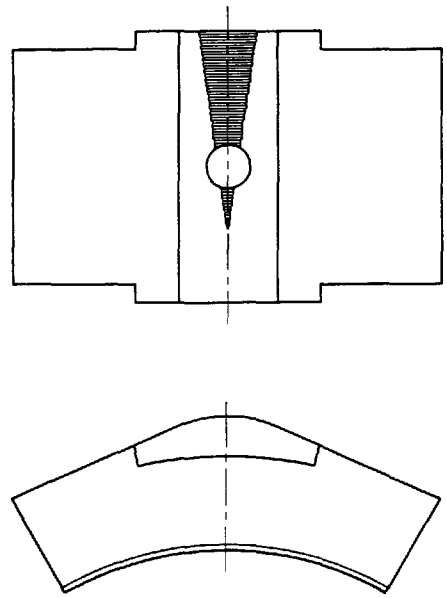

Figure 10. Schematic Showing Misalignment Wear Pattern on a Rocker Back Pad.

The second design is the spherical point pivot design shown in Figure 11, in which a spherical button is mounted in either the pad or the housing and pivots on a hardened flat disc in the opposite member. This allows tilting in all directions, but because of high pivot stresses, it is subject to pivot flattening and rapid clearance increase. This may be minimized by using hardened mating surfaces. Cracking of these supports has been observed under high impact loads.

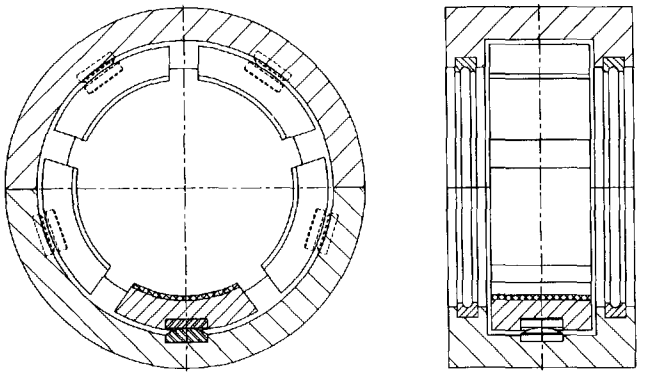

Figure 11. Spherical Point Pivot Tilt Pad Journal Bearing.

The third design is a spherical surface pivot design. As shown in Figure 12, the pad load is transmitted into the housing through a ball and socket arrangement. Under normal conditions, the ball and socket size can be selected to quite easily control pivot stresses to a low level.

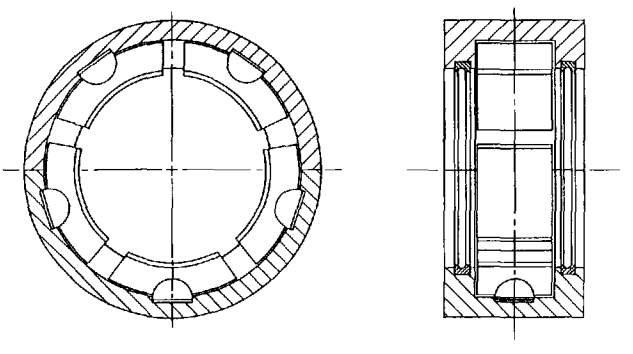

Figure 12. Spherical Surface Pivot Tilt Pad Journal Bearing.

Hydrostatic Bearings

Similar to axial groove and multilobe, but with additional pockets and high pressure oil supply to provide hydrostatic lift. Hydrostatic bearings are used for extreme loads, low speeds, or low viscosities where the hydrodynamic action alone is not sufficient to provide adequate load capacity and film thickness.

Several types of hydrostatic bearings are shown in Figure 13. Any number, size, and shape of pockets can be designed depending on the loads to be carried and the stiffness and damping dynamic characteristics required by the supported rotor. Oil supply pressures of up to 2000 psi or more are sometimes required to obtain the desired load capacity.

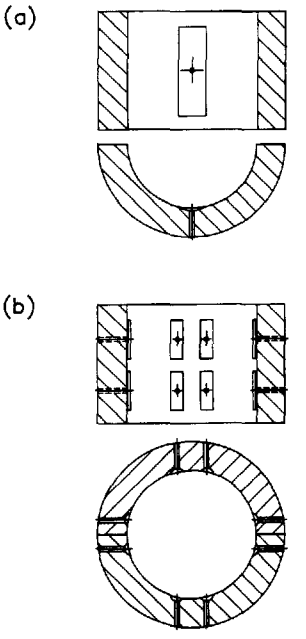

Figure 13. Schematic of Typical Hydrostatic bearings.

Hybrid Bearings

Hydrodynamic Damper Bearings

These bearings rely on a defined clearance space of entrapped oil to establish a counteracting support to that established by the bearing shell. These are hard to design for lift off and sustained motion.

Elastomeric Supported Damper Bearings

These bearings use elastomer rings on the outside diameter of the bearing shell to confine an oil space and to help lift off the bearing as it starts to react to unbalanced and rotor dynamic loads. An example of such a design is shown in Figure 14.

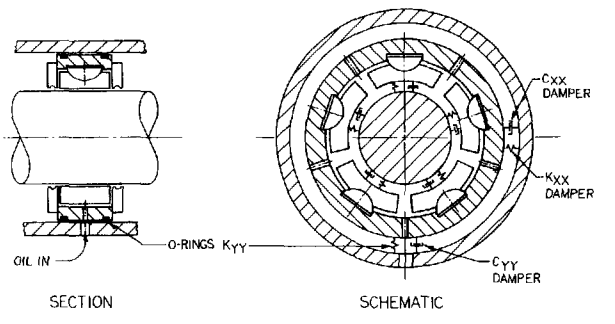

Figure 14. Schematic of Elastomeric Damper Bearing.

There is limited experience with hybrid bearings, and they are in a constant state of redesign. Assembly is complicated, and they are used as a last resort, primarily to counter stability problems.

MEASUREMENT OF BEARING CLEARANCE

Bearing clearance is one of the most important parameters in the operation of a bearing. Therefore, it is important to determine the installed clearance along with the bore contour and concentricity to the outside fit diameter.

The final bearing clearance is influenced by the contour of the housing into which it is installed, and also by the amount of

interference or crush between the bearing shell and the support housing. Proper crush is crucial in the operation of high speed and critical machinery. Improper crush can lead to either a hot bearing or a loose bearing fit. A loose bearing may contribute to synchronous or subsynchronous type vibrations. It is critical that a metal to metal fit to 0.002 in of crush on diameter be maintained for a proper bearing installation. This criterion applies to most thick shell bearings and linings. For thin shell bearings, and in situations where the rigidity of the housing is much greater than that of the bearing liner, the values for crush should be arrived at by consulting with the bearing and equipment manufacturer. What should be guarded against in these cases is excessive crush or a contact stress that could cause local yielding of the material. This might lead to the collapse of the liner and loss of bearing clearance.

A procedure to check bearing crush is illustrated in Figure 15. Place shims of equal thickness (Ts) along both sides of the split lines. Lay a strip of plastigage or lead wire on top of the bearing shell along the shaft axis. Install the bearing cap or strap and tighten all split line bolts. The plastigage or lead wire should indicate a thickness (Tf) equal to or less than the shim thickness used at the split line. The amount of interference (crush) is equal to the difference between the indicated clearance (Tf) and the shim thickness (Ts). A negative value for the crush indicates a loose bearing and the problem has to be rectified by replacing the bearing or using shims around the circumference to maintain an interference fit. Once the desired crush has been obtained, the bearing clearance should be checked again to ensure that the crush is not excessive to the point of significantly reducing the bearing clearance.

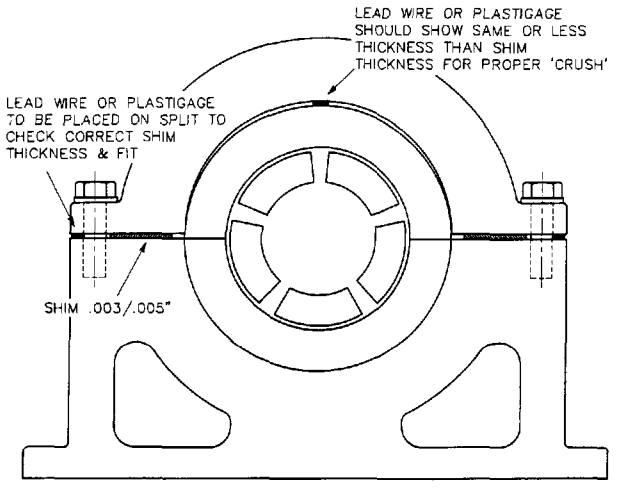

Figure 15. Measurement of Bearing to Housing Fit (Crush).

A lift check is commonly utilized to accomplish this task. It is important to recognize that the field lift check is fraught with problems which hinder it from providing an accurate measure of bearing clearance. Therefore, it should be used with caution and mainly to check gross problems and not as a qualifying check for acceptance or rejection of the bearing. Some of the problems encountered in a field lift check are, sticky or uncalibrated dial indicators, a soft foot on the machine, or a flexible housing support. Placement of the indicators as well as the means by which the rotor is lifted can significantly influence the outcome of this measurement.

The lift check or bump check method shown in Figure 16 can sometimes result in values larger than the specified clearance on certain bearing configurations. This is due to the fact that under static conditions the shaft will sink between the two bottom pads on bearing configurations having a load between pad design and the shaft will rise above the clearance bore at the top of the lift on load-on-pad designs. Nicholas [2] presented a graphic description of the shaft sink. This is illustrated in Figure 17, and a quick reference guide to determine the lift and shaft sink for the majority of tilt pad bearing configurations in use is presented in Table 1. The shaft sink below the clearance circle is important particularly with the use of end seals on three pad bearings where the shaft sink is 50 percent of the bearing diametral clearance. An alternate method to a lift check is a mandrel check either vertically or horizontally (Figure 18).

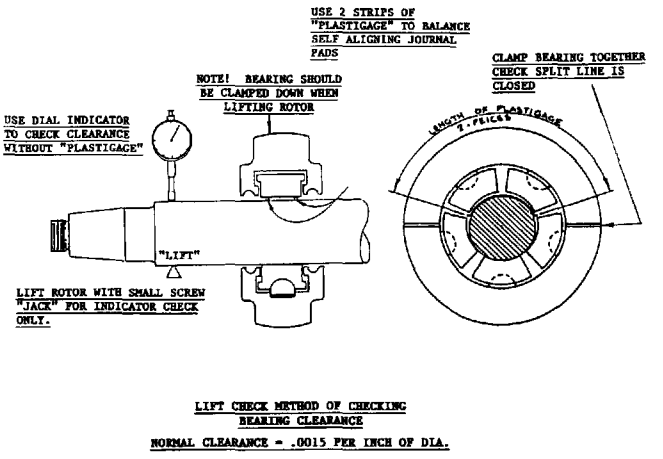

Figure 16. Lift or Bump Check for Measuring Bearing Clearance.

Table 1. Static Shaft Sink and Total Shaft Lift.

# of Pads	Load Config	Theta	Static shaft sink below centered pos. Sc=CD/2cosθ	Static shaft sink blow clearance cir. Scl=Sc-(Cd/2)	Total shaft travel (lift) X=Scl+Cd
3	LBP	60	Cd	0.5 Cd	1.5 Cd
3	LOP	0	0.5 Cd	0	1.5 Cd
4	LBP	45	0.7071 Cd	0.2071 Cd	1.4142 Cd
4	LOP	0	0.5 Cd	0	Cd
5	LBP	36	0.6180 Cd	0.1180 Cd	1.1180 Cd
5	LOP	0	0.5 Cd	0	1.1180 Cd
6	LBP	30	0.5774 Cd	0.0774 Cd	1.1547 Cd
6	LOP	0	0.5 Cd	0	Cd
7	LBP	25.71	0.5550 Cd	0.0550 Cd	1.0550 Cd
7	LOP	0	0.5 Cd	0	1.0550 Cd
8	LBP	22.50	0.5412 Cd	0.0412 Cd	1.0824 Cd
8	LOP	0	0.5 Cd	0	Cd

LBP = Load Between Pads
LOP = Load On Pad
Theta = Angle between pivot and vertical
Sc = Static shaft sink below centered position
Scl = Static shaft sink below clearance circle
Cd = Assembled diametral clearance (mils)
X = Total shaft travel (lift)

Note: For even # of pads and a LBP configuration twice the value computed for Scl is added to Cd to obtain the proper lift.

For an odd # of pads and a LOP configuration, even though the shaft sink is zero, a lift beyond the clearance circle will occur at the top and has been accounted for in the above table.

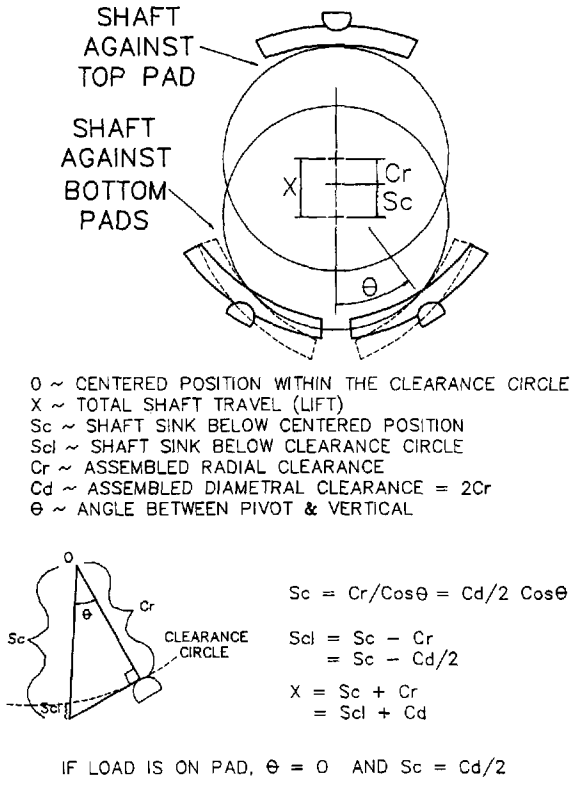

Figure 17. Schematic Showing Shaft Sink Between Pads.

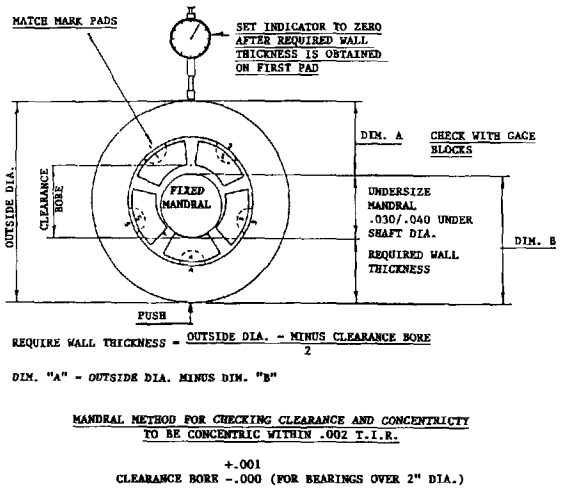

Figure 18. Mandrel Method for Checking Clearance and Concentricity.

BEARING MATERIALS AND CONSTRUCTION

Thick Walled vs Thin Walled Construction

Bearings in high speed turbomachinery are mainly of the thick walled construction. The wall thickness is generally 1/10 to 1/8 the diameter of the bearing. The material is usually steel, cast iron, or bronze. The thick walled bearing shells can be rebabbitted and repaired in some instances. On the other hand, thin walled shells are predominant in the reciprocating compressors and internal combustion engine applications. The wall thickness is in the order of 1/30th the diameter of the bearing and have a relatively thinner layer of babbitt which can range from 0.002 to 0.005 in. The thin wall construction makes the bearing shell very flexible and, therefore, a tight clamping assembly is required in the housing to maintain roundness. Thin walled bearings were first introduced to meet the demands for high load carrying capacity and light weight in automobile engines, but their success has led to their wider use. They are made with high precision and, consequently, tend to have a higher load carrying capacity. They are made in large quantities and thus are relatively cheap as opposed to the thick shell bearings which are individually made and often custom designed to the particular application.

Bearing Materials

Depending on the service and loading, the materials used in bearings can cover a wide range of metal alloys. Changes in operating conditions and the higher demands put on bearings have resulted in further improvements in bearing materials. The thick shell bearings which are predominantly used in turbomachinery applications for the most part consist of a steel shell with a relatively thick layer of babbitt (20 to 50 mils). The babbitt used is mainly tin base babbitt, due to its excellent antiseizure characteristics, corrosion resistance, conformability, and embedability. Typical compositions and properties of babbitt materials are shown in Tables 2 and 3. The fatigue resistance of tin base babbitt is very poor, particularly when it is applied in the thickness of 10 mils and over, as shown in Figure 19. Although turbomachinery applications normally apply a steady load on the bearing, due to the weight of the rotor, the unbalance present in most rotors and the high speed operation of such machines generate a dynamic load on the bearings which can cause fatigue failure of the babbitt. The development of better filtration for the lube oil system and the requirement that turbomachinery equipment run for extended periods between overhauls have lessened the significance of embedability in these bearings, and increased the importance of fatigue strength. This is the reason why many bearings in turbomachinery applications are being converted to bronze backing with a thin layer of babbitt in the range of five to eight mils. On the other hand, bearings in reciprocating machinery applications, although run at relatively lower speeds, have a much higher dynamic loading. These loads have progressively increased, and the bearings in such applications require even higher fatigue strength than that provided by the thin babbitt alone. This is the reason why aluminum or copper based alloys are used on a steel backing. The steel backing provides the strength and allows for a good interference fit between the bearing and its housing, which is critical to minimize fretting damage. A thin overlay of babbitt is used to

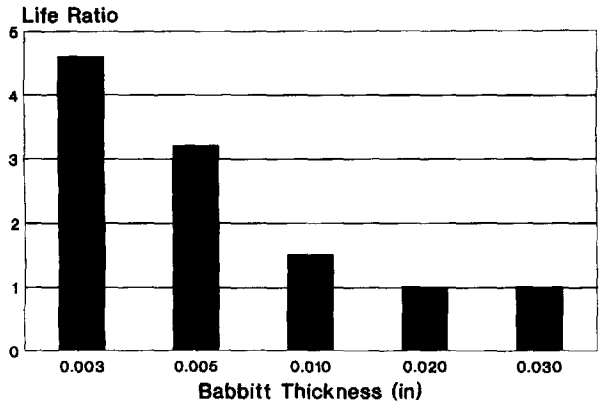

Figure 19. Relative Fatigue Strength as a Function of Babbitt Thickness.

Table 2. Composition and Physical Properties of Some Babbitt Alloys.

Alloy grade No.[b]	Nominal composition, percent				Yield point,[c] psi		Ultimate tensile strength in compression,[d] psi		BHN	
	Sn	Sb	Pb	Cu	68 F	212 F	68 F	212 F	68 F	212 F
1	91	4.5	....	4.5	4,400	2,650	12,850	6,950	17.0	8.0
2	89	7.5	....	3.5	6,100	3,000	14,900	8,700	24.5	12.0
3	84	8.0	....	8.0	6,600	3,150	17,600	9,900	27.0	14.5
7	10.0	15.0	75.0	...	3,550	1,600	15,650	6,150	22.5	10.5
8	5.0	15.0	80.0	...	3,400	1,750	15,600	6,150	20.0	9.5
13	6.0	10.0	Rem.							
15[e]	1.0	16.0	Rem.	...	....	....	....	....	21.0	13.0

[a]The compression-test specimens were cylinders 1.5 in. long and 0.5 in. diam, machined from chill castings 2 in. long and 0.75 in. diam. Brinell tests were made on the bottom face of parallel machined specimens cast in a 2-in. diam by 0.625 in. deep steel mold at room temperature.

[b]Alloy grade No. 9 was discontinued in 1946, and Nos. 4 to 6, 10 to 12, 16, and 19 were discontinued in 1959.

[c]The values for yield point were taken from stress-strain curves at a deformation of 0.125 percent reduction of gage length.

[d]The ultimate-strength values were taken as the unit load necessary to produce a deformation of 25 percent of the length of the specimen.

[e]Also nominal arsenic 0.10 percent.

provide for conformability and embedability. In the case of thin shell bearings, the babbitt alloy is usually strip cast as opposed to the static or centrifugal casting utilized with thick-shell bearings. The rapid-quench conditions of the strip-cast process allows the babbitt layer to attain a much higher fatigue strength. Of the common babbitt alloys, the most widely used are tin base babbitt and lead base babbitt. Tin base babbitt has a slightly greater compatibility and ductility compared to lead base babbitt alloys.

On bearings where the lining material is made of the higher strength aluminum or copper based alloys, a thin layer of soft conformable material generally referred to as an overlay plate is applied. The overlay plate is made of lead tin, lead tin copper, or lead indium and is generally weaker than the familiar babbitt alloy. The thickness of the overlay plate must therefore be no thicker than 0.004 in for the effective strength to be higher than that of babbitt. The overlay plate is galvanically applied. Recently, overplate layer thickness has been maintained around 0.001 in for increased fatigue strength. Bearings that are made of steel backing and aluminum or copper lining material and an overlay plating are generally referred to as trimetal bearings. Where copper lead or lead bronze type linings are used, the overlay serves the additional function of protection against corrosion.

Table 3. Relative Comparison of Bearing Material Properties.

Bearing Material	Min Shaft Hardness, Brinell	Load Carrying Capacity	Maximum Operating Temp.	A	B	C	D
		PSI	°F				
Tin Base Babbitt	150 or less	800-1,500	300	1	1	1	5
Lead Base Babbitt	150 or less	800-1,200	300	1	1	3	5
Alkali Hardened Lead	200-250	1,200-1,500	500	2	1	5	5
Cadmium Base	200-250	1,500-2,000	500	1	2	5	4
Copper Lead	300	1,500-2,500	350	2	2	5	3
Tin Bronze	300-400	4,000 +	500 +	3	5	2	1
Lead Bronze	300	3,000-4,500	450-500	3	4	4	2
Aluminum Alloy	300	4,000 +	225-300	5	3	1	2
Silver Overplated	300	4,000 +	500	2	3	1	1
Tri Metal Babbitt Surfaced	230 or less	2,000-4,000 +	225-300	1	2	2	3

A Compatibility *
B Conformability *
C Corrosion Resistance *
D Fatigue Strength *

* Arbitrary scale with 1 being the best material and 5 the worst

BEARING DYNAMICS AND BASIC CONCEPTS

Concept of Cross Coupled Coefficients

The type of fluid film bearings herein addressed are often referred to as self acting hydrodynamic bearings as opposed to hybrid and hydrostatic type bearings. Although most of these bearings are pressure fed, the oil is supplied at a low pressure (15 to 20 psig) mainly to ensure that the bearing operates in a flooded regime, and that sufficient flow is maintained to remove heat away from the bearing surface. The hydrodynamic pressure generated in the oil film is a function of the operating conditions (i.e., speed, load, oil viscosity, geometry of the bearing, etc.), and not significantly influenced by external supply pressure. The hydrodynamic pressure generated in the bearing and the location of the journal center with respect to the bearing center are shown in Figure 20. The only force acting on this journal is the portion of the shaft weight supported by the bearing. Although this weight is directed vertically downwards, the equilibrium position shown in the figure suggests a net reaction force in the fluid which is not directly in line with the static eccentricity vector. This means the fluid reaction force has two components. The first is referred to as the direct force, and is expressed as Fy = –Kyy * Y. The second is referred to as the cross coupled reaction force due to the cross coupled stiffness term Fx = –Kxy * Y. This is interpreted as the reaction force in the x-direction, due to a displacement in the y direction. Similarly, a displacement of the journal in the x-direction will produce a reaction force in the oil film which is proportional to the Kxx and Kyx stiffness terms. Cross coupling is a very important phenomenon in turbomachinery applications and its origin lies in the rotational bias inherent in rotating equipment, the fluid circulation around the rotating elements, and the circular geometry of the bearings, seals, or casing encompassing the rotating element. This phenomenon has no parallel in other structural or dynamic systems. If a vertical load is applied to a cylindrical cantilever beam for example, the beam will only deflect vertically. There is no cross deflection as is the case in rotating equipment. Although the discussion thus far was limited to stiffness terms, the same applies to damping and inertia terms. For a given velocity of the journal, there are direct and cross-coupled damping forces. The lubricant fluid film generates stiffness, damping, and inertia forces. The oil film in a journal bearing generally provides the following:

- Supports the static weight of the rotor.
- Damps out the shaft vibrations.
- Feeds energy into the whirling motion (cross coupled stiffness).

The cross coupled stiffness terms have a great influence on the stability of rotating machines. For the cross coupled terms to generate a tangential force which will add energy to the dynamic system (in this case the journal orbit), the reaction forces due to these cross coupled stiffness terms have to combine resulting in the net force shown in Figure 21, which is reproduced from Vance [3]. This force is tangential to the shaft orbit and acting in the same direction as the instantaneous motion of the journal (forward driving force). For a forward destabilizing force to exist, the Kxy term must be positive and the Kyx term negative. The resultant force from the cross coupling terms adds energy to the system, therefore the name, destabilizing force or negative damping, is used to describe such a term. Damping, which is generally assumed to be positive, dissipates energy from the dynamic motion and, thus, promotes stability. The circular symmetry of a plain sleeve bearing promotes a circular motion of the journal (circular orbit). This makes it susceptible to the destabilizing components which are more effective in driving the whirl motion under such conditions. Distorting such a circular symmetry is the reason why crush is sometimes helpful in promoting stability. Elliptical (Lemon bore), and offset halves bearings aim to counter the destabilizing components by altering the circular geometry and the symmetry present in a cylindrical journal bearing. Murphy [4] provided an excellent explanation for how asymmetry promotes stability in a rotating machine. He computed the energy fed into the whirling motion by the bearing coefficients. The shaft motion within the bearing is typically represented by an elliptical orbit. The area enclosed by the elliptical whirl orbit in the xy plane is represented by the following expression:

$$A = \pi \bar{x}\, \bar{y} \sin(\phi x - \phi y) \tag{1}$$

The energy input by the bearing coefficients is computed by integrating the force times displacement around the closed curve of the ellipse. For the cross coupled stiffness coefficients:

$$E_{cyc} = A\,(Kxy - Kyx) \tag{2}$$

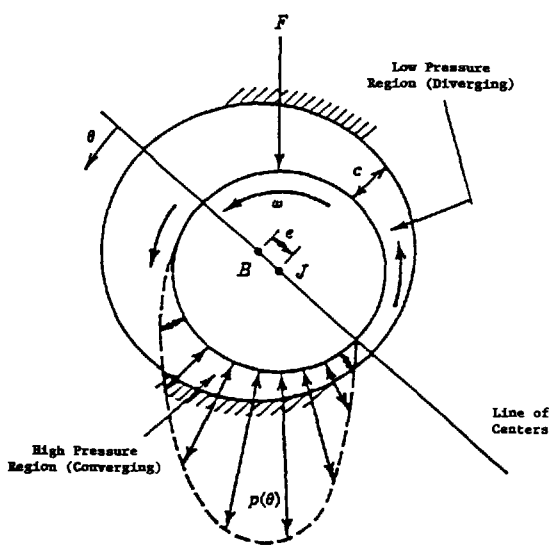

Figure 20. Hydrodynamic Pressure Profile in a Cylindrical Journal Bearing.

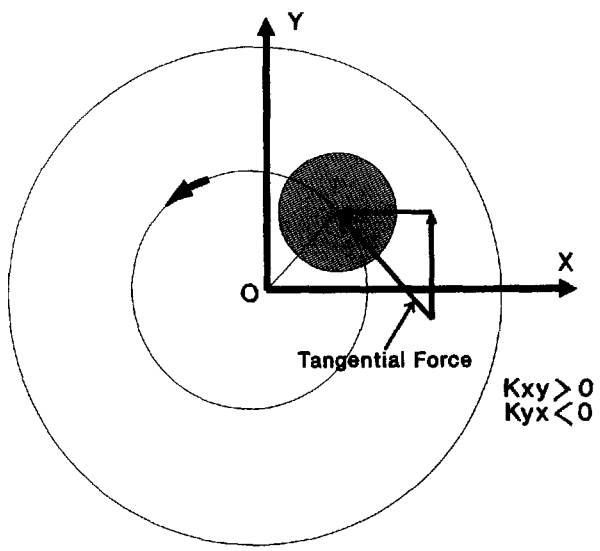

Figure 21. Cross Coupled Stiffness Representation, Vance [3].

The important point that can be drawn form this representation, is that the destabilizing effect of cross coupling is directly proportional to the area of the whirl orbit. Introducing asymmetry into the direct stiffness supports produces flat and elongated orbits in each of the principal directions. This results in smaller area and therefore, lower destabilizing effects by the cross coupled coefficients. One can also note from Equation (2) that the energy input will also be zero if the cross coupled coefficients are equal and have the same sign. The worst combination is when the orbit is circular and the cross coupled coefficients are equal and opposite in signs.

As is the case with most engineering applications, there is a slight penalty with such an approach. The asymmetry will result in a slight increase in the amplitude of vibrations at the critical speed. A more graphic presentation of this aspect is shown in a later section dealing with load on pad and load between configurations for tilt pad bearings.

The discussion in this section was aimed at providing an insight into the effects of cross coupling in fluid film bearings. The simple analysis shown above is not sufficient by itself to provide a complete evaluation of the stability limits of a turbomachine. There is no substitute for a full rotordynamic stability analysis. This is because the rotor and the bearings are both integral elements of the rotating machine. Although attention in this tutorial is focused on the cross coupling in the bearings and how they produce nonsymmetry in the stiffness and damping matrices. The rotational bias in turbomachines have other sources which also contribute to the nonsymmetry in the dynamic system. The gyroscopic moments of impellers and disks always introduce a skew symmetric component into the damping matrix. Therefore, a complete stability analysis should contain an adequate representation of all the elements contributing to the dynamic behavior of a rotor bearing system.

The Sommerfeld Number

Dynamic stiffness and damping coefficients are generally presented as a function of a dimensionless parameter known as the Sommerfeld number. There are many ways of expressing the quantities that form this dimensionless variable. Sommerfeld himself presented this in two different ways in his papers. Therefore, it is very important to distinguish which form of this expression is being used. The more common way of expressing this variable is

$$S = \frac{\mu NLD}{W}\left(\frac{R}{c}\right)^2 \qquad (3)$$

Where

- μ is the viscosity in reyns
- N is the running speed in revolutions/second
- L is the pad length in inches
- R is the journal radius in inches
- W is the bearing load in pounds
- c is the pad bore radial clearance in inches

The variation of the stiffness and damping coefficients is shown in Figures 22 and 23 as a function of the Sommerfeld number for a four pad tilting pad bearing with a load between pad configuration. From these figures, one sees how the different variables that constitute the Sommerfeld number influence the stiffness and damping provided by the bearings. Higher loads and lower speeds will result in a lower Sommerfeld number for a given bearing configuration. On the other hand, lighter loads and higher speeds results in higher Sommerfeld numbers.

How the variables in the Sommerfeld number affect the stiffness and damping coefficients depends to a great extent on what portion of the curve the particular machine operates. Most of the curves for

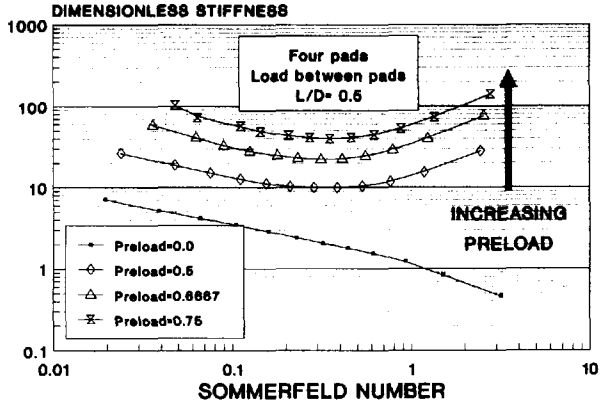

Figure 22. Variation of Bearing Stiffness as a Function of the Sommerfeld Number for Different Bearing Preloads.

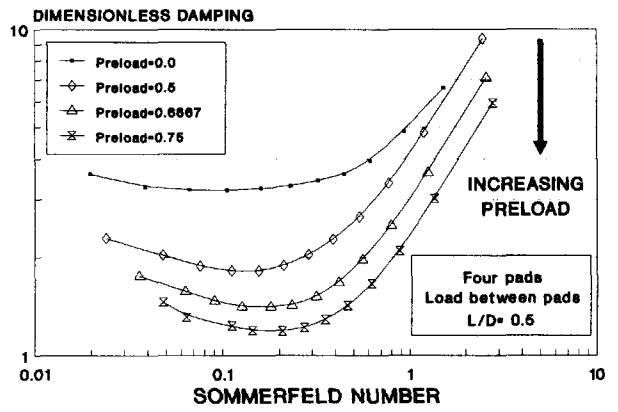

Figure 23. Variation of Bearing Damping as a Function of the Sommerfeld Number for Different Bearing Preloads.

different preloads posses a minimum. Whether the operating regime of a given configuration resides to the left or right of the minimum determines how the changes will reflect on the stiffness and damping values. If a certain application lies to the left of the minimum, then decreasing speed or increasing load will shift the Sommerfeld number to the left, and thus increase stiffness. Decreasing the length of the pad will also result in increasing the stiffness. The length of the pad is a variable that the designer has more control over than the speed or load. If the objective is to stiffen the bearing and shift a critical further away from the operating speed range, then this will constitute a viable alternative. Note in this case, the eccentricity will also increase, thus increasing the operating temperature of the bearing and reducing the minimum film thickness. An increase in the pad length will reduce the stiffness and damping of the bearing. On the other hand, if the application lies to the right of the minimum, then increasing the length will increase both the stiffness and damping coefficients. One can see from this that the effect the length has on the bearing cannot be established until the operating region for the particular application is known. Thus, the length can increase or decrease the stiffness and damping coefficients for a given bearing.

Effects of Bearing Preload

Preload can be explained by the graphic presentation shown in Figure 24. Preload is generally positive, and in some applications is set to zero if temperature limitations are present. It is a very useful parameter which is often used by the bearing designer to alter the characteristics of a certain rotor bearing system. A good

indication of how preload affects the stiffness and damping coefficients is also apparent in Figures 22 and 23. An increase in preload will increase the stiffness, but on the other hand will result in a reduction in the damping available from a given bearing configuration. This is where a bearing optimization study is often required to determine the most desirable characteristics for a given application.

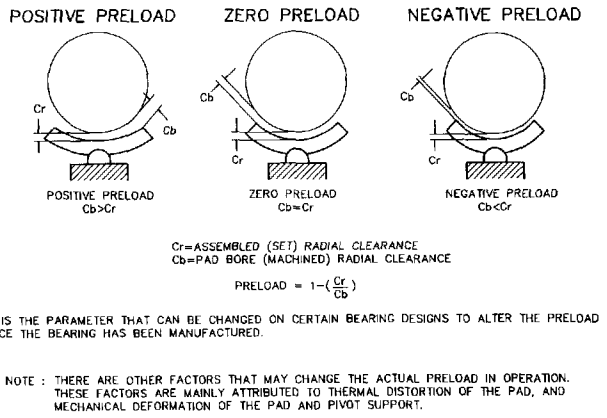

Figure 24. Schematic Presentation of Preload in a Tilt Pad Bearing.

The preload in a bearing configuration has other aspects or considerations which must be accounted for or analyzed in addition to its effect on the stiffness and damping coefficients. Preload is a critical bearing parameter. Without preload, some pads (top pads) might operate completely unloaded. Unloading of the pads reduces the overall stiffness of the bearing, and also affects stability, because the upper pads do not aid in resisting cross coupling influences. Unloaded pads are also subject to flutter instability; a phenomenon often referred to as leading edge lockup or spragging. This is where the leading edge is forced against the shaft and is maintained in that position by the frictional interaction of the shaft and the pad. A detailed description of this phenomenon and the means to reduce or eliminate such an effect is discussed in detail in the section on bearing failure analysis.

Load On Pad (LOP) vs Load Between Pad (LBP)

When higher load capacity and better synchronous response characteristics are the predominant factors, the load between pad configurations are favored over the load on pad tilt pad bearings. This is because the damping by the effective support area is larger with a load between pad configuration. Consequently, heavy rotors running at relatively low speeds (low Sommerfeld number applications), predominantly have tilt pads, with a load between pad configuration. On the other hand, light rotors running at high speeds do not require the load capacity of a load between pad configuration. Furthermore, applications that fall in this category (i.e., light rotors running at high speeds) often have aerodynamic cross coupling and thus stability is more of a concern than synchronous response. In these applications, a load on pad configuration provides asymmetry in the support. Asymmetry was shown to enhance stability as described in a previous section. The stiffness coefficients for a four pad with a load between pad (LBP) is compared in Figure 25 to that of a load on pad (LOP) tilt pad bearing. The load on pad configuration has a much higher asymmetry while the load between pad is symmetric. The following example will help show the advantages of each of the bearing load configurations. The rotor model shown in Figure 26 is for an industrial centrifugal compressor. The stability of the rotor was analyzed with a four pad bearing in a load on pad and load between pad configurations. In the original analyses, no aerodynamic cross coupling was introduced in the model. The logarithmic decrement for the first forward mode was higher for the load between pad configuration, as shown in Table 4. If aerodynamic cross coupling is introduced, the load on pad configuration produces a positive logarithmic decrement (stable), whereas the load between pad configuration results in a negative logarithmic decrement and, therefore, an unstable rotor bearing system. The first forward mode for each case is shown in Figures 27 and 28 for the load between pad and load on pad cases. This example shows how the load on pad configuration which possesses less damping, but more asymmetry can be a more appropriate selection for a high speed,

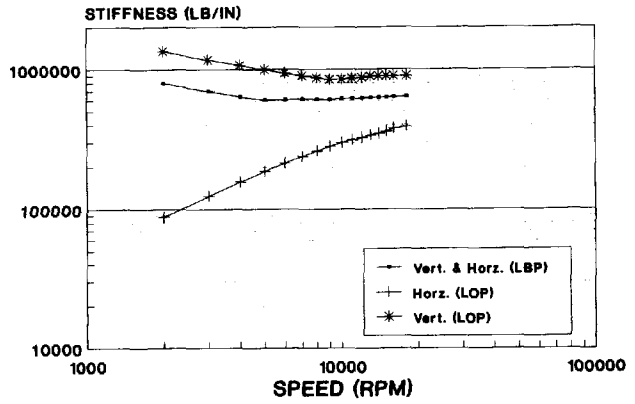

Figure 25. Stiffness Comparison between Load On Pad (LOP) and Load Between Pad (LBP) Bearings.

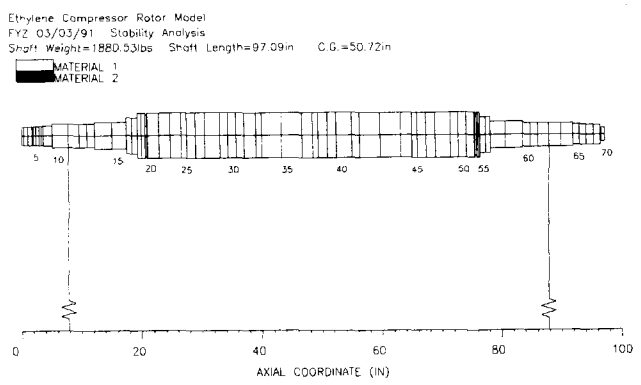

Figure 26. Rotordynamic Model of a Centrifugal Compressor.

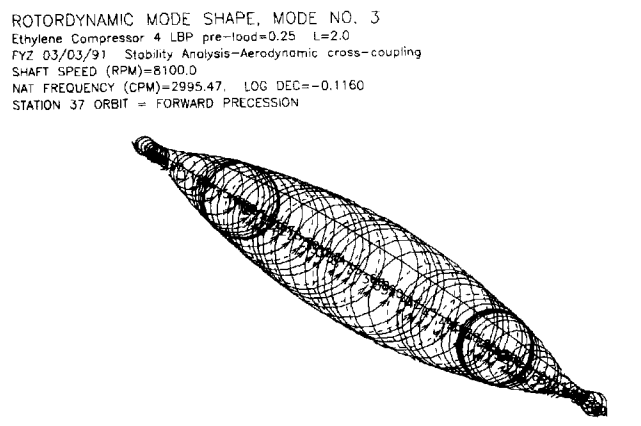

Figure 27. First Forward Mode with Load Between Pad Bearing.

light weight compressor, compressing a dense gas. Although asymmetry enhances stability, this does not come at no cost as discussed earlier. The response to unbalance as the rotor traverses the critical speed will be higher along the axis with the lower stiffness. This is demonstrated graphically in Figure 29. The amplification factor at the first critical is much higher for the load on pad configuration.

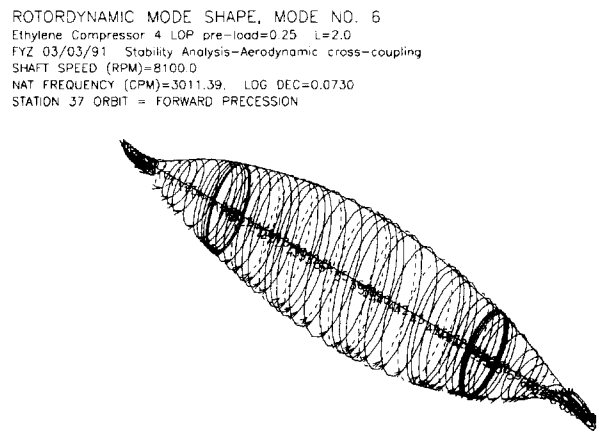

Figure 28. First Forward Mode with Load On Pad Bearing.

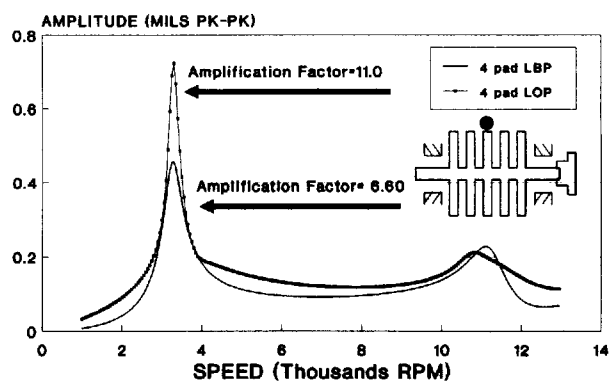

Figure 29. Unbalance Response Comparison between Load On Pad (LOP) and Load Between Pad (LBP) Bearings.

Table 4. Comparison of Stability and Unbalance Response for Load On Pad (LOP) and Load Between Pad (LBP) Bearings.

Bearing Config.	Logarithmic Decrement		Amplification Factor
	With Aerodynamic Cross-Coupling	Without Aerodynamic Cross-Coupling	
4 Pad LBP	–0.116	0.467	6.6
4 Pad LOP	0.073	0.267	11.0

Variation in the Load Direction and Magnitude

The bearing design is not complete unless the application in which the bearing is put into has been taken into consideration. This is particularly important in bearings designed for gear applications. While the load in most bearings is simply due to the weight of the rotor, in gear applications, the load is further complicated by gear reaction forces which can be orders of magnitude larger than the weight of the rotor. This load can also change in magnitude and direction depending on the torque, speed, and weight of the rotor, in addition to any external forces applied to the shaft. It is, therefore, essential to adequately evaluate the bearing configuration for such an application, taking into consideration the change in the magnitude of the load and the swings in direction from the unloaded to the loaded condition.

Determining the load direction is essential for stability considerations, as well as for proper location of the feed grooves. Shelly and Ettles [5] have shown that a feed groove located along the load line can result in a significant reduction in the load capacity of the bearing. This reduction can be as high as 60 percent when operating at high eccentricities.

Aside from its effect on the load capacity, the direction of the load is also essential because of its effect on the hydrodynamic forces in the fluid film. The dynamic characteristics of the oil film (both stiffness and damping), are also influenced by the magnitude of the load along with its direction, in addition to their dependence on the speed, operating eccentricity, and oil temperature.

As is the case with most high speed machinery, stability becomes a major factor in evaluating the appropriate bearing for a certain application. A detailed stability analysis for a speed increasing upward-mesh set of gears was made using three different types of bearings. A plain sleeve bearing with two axial grooves, a pressure dam bearing, and a tilt pad bearing were used in this analysis. The requirement for the machine train to run unloaded, and at partial load conditions, pressed the limits of the fixed geometry bearing configurations which are often used in such applications. The rotordynamics analysis program "RAPP" [6], which is based on the characteristic polynomial method developed by Murphy and Vance [7], was utilized in this analysis. This program computes the linear critical speeds and stability of the rotor bearing system. Stability is measured by the logarithmic decrement (log dec). A positive log dec is required for a stable system. The rotor bearing system was first analyzed with a two axial groove sleeve bearing. The resultant load vector was calculated for the NO LOAD conditions, as well as for 50 percent and 100 percent load. The results for these three loading conditions are shown in Table 5. The rigid rotor stability threshold speed predicts an unstable operation for the unloaded condition. The stability threshold speed dropped considerably for the 50 percent load case as compared with full load. Unstable modes were predicted by program "RAPP," and are shown in Figures 30 and 31 for the first two forward modes. Both modes have a negative log dec and thus are unstable. They also lie very close to 50 percent of the pinion operating speed. This type of bearing is thus inadequate to provide stable operation throughout the operating speed and load conditions.

The geometry of a pressure dam bearing is shown in Figure 8. In addition to the effect of changes in load direction, this type of

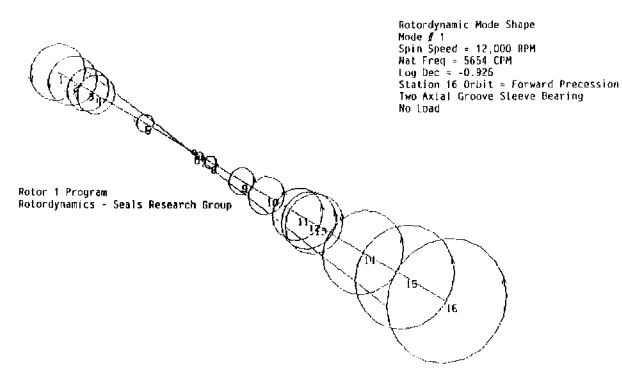

Figure 30. Pinion's First Unstable Forward Mode.

Table 5. Stability Analysis for a Pinion Supported by Sleeve Bearings.

Load	Ecc. Ratio	Attitude Angle (deg)	Stab. Threshold (rpm)	Log Dec
100%	0.293	–56.95	26420	3.133
50%	0.163	–43.68	16060	0.344
No Load	Unstable		5596	–0.926

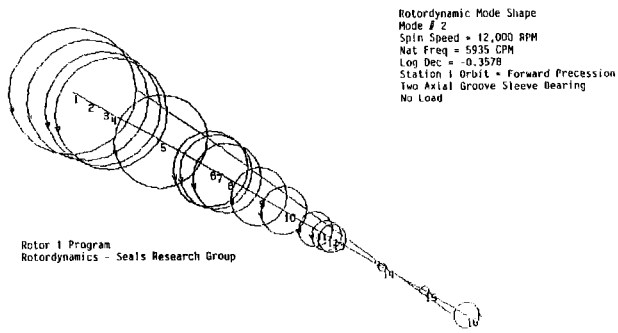

Figure 31. Pinion's Second Unstable Forward Mode.

bearing is also sensitive to the location of the pressure dam. Therefore, the analysis was extended to variations of the dam location in addition to variations of the load conditions. The orientation shown in Figure 32 is a typical orientation used by some gear manufacturers for a pressure dam bearing supporting a pinion driven by an upward mesh. The dam location for orientation 2 in Table 6 was obtained by clocking 20 degrees counter to the

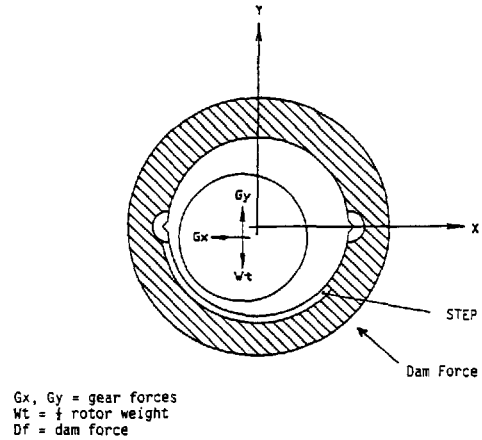

Figure 32. Schematic of Pressure Dam Bearing in an Upward Mesh Application.

direction of rotation. Orientation 3 is obtained by clocking 180 degrees counter to the direction of rotation from orientation 1.

Orientation 4 is obtained by clocking 270 degrees counter to the direction of rotation from orientation 1. The results are shown in Table 6. The pressure dam bearing possesses a higher stability margin than the plain sleeve bearing, but is sensitive to the variations in the load, and the location of the dam relative to the load vector. The attitude angle is measured from the negative Y-axis to the line of centers in the direction of rotation. This is the traditional way of viewing the equilibrium position of the journal, as it relates to stability in most turbomachinery applications (gravity loading). However, in the case of gear applications, the load vector is not as much influenced by the weight of the rotor which points in the negative Y-axis, but is more influenced by the gear reaction forces. Additionally in the case of pressure dam

Table 6. Stability Analysis for a Pinion Supported by Pressure Dam Bearings.

Pressure Dam Bearing					
A- 100% Load					
Orientation	ECC Ratio	Attitude Angle (deg) ψ	Attitude Angle (deg) ψ'	Stab Threshold (rpm)	Log Dec
1	0.4268	–71	86	63550	6.481
2	0.646	–70	97	Infinite	9.965
3	0.15	135	113	30980	3.209
4	0.344	–65	49	27590	3.492
B-50% Load					
1	0.388	–64	93	51430	5.708
2	0.494	–72	100	109200	7.950
3	0.252	126	105	35860	4.007
4	0.228	–27	64	29000	2.758
C-No Load					
1	0.336	–56	101	43100	1.731
2	0.322	–78	100	41530	4.600
3	0.323	118	97	41550	4.762
4	0.368	36	60	47480	5.363

bearings, the dam forces must also be accounted for, and the resultant load vector must be determined by an algebraic summation of all these forces. A meaningful attitude angle is then the angle measured from the resultant load vector to the line of centers in the direction of rotation. This is the column headed by the symbol (ψ'). In the loaded condition, orientation 1 and 2 indicated good stability. This shows that a change of 20 degrees in the dam location has negligible effect at 100 percent load. There was, however, a reduction in the stability threshold speed for the 50 percent load and the NO LOAD cases. Orientations 3 and 4 showed the lowest stability margin for all load conditions.

Tilt pad bearings were analyzed using the load between pad and load on pad configurations. The rotordynamic analysis showed that the lowest two modes which were the most susceptible to becoming unstable with the pressure dam and sleeve bearing, were well damped with the tilt pad bearings. The higher modes were also more stable. The swing in load from 50 percent to 100 percent did not shift the load direction significantly to detect any effect from load changes. This is because of the light weight of the pinion rotor used in this model. A heavier rotor was then used in the model to emphasize the effects of change in the load direction. The variation in the load direction in this case resulted in the load between pad orientation to become closer to a load on pad configuration. This resulted in an increase in the direct support stiffness and a subsequent increase in the critical speed. Although stability was not affected by the load change, the location of the critical speeds might be the more important parameter to evaluate in the case of tilt pad bearings, particularly if the rotor is running close to a critical speed. Another factor that should also be considered is the effect the change in load orientation has on the damping and unbalance response, since the damping coefficients will also change with load. Some designers have preference for increasing the number of pads in order to reduce the variation in the bearing coefficient as the load swings from load on pad (LOP) to load between pads (LBP) or visa versa. Although this seems justified, generalizing is not recommended without considering each application on a case by case basis, since increasing the number of pads results in a penalty on the load capacity. Furthermore, increasing the number of pads particularly with gear bearings which are generally long will result in pad dimensions which are out of proportion or impractical.

One of the major characteristics of tilt pad bearings that has favored their use over other bearing configurations is the fact that they have no cross coupled bearing coefficients. However, this is only true when the loading direction is symmetric with respect to the bearing geometry; i.e., load is directly on pad or load between pads. In the case of gear loading where there is a swing in load direction from no load to full load, conditions will exist where asymmetric loading will occur and cross coupled oil film coefficient of significant magnitude will result. Although cross coupled bearing coefficients are worrisome because they are usually associated with rotordynamic instability, in this case they should not be of great concern. This is because the stiffness coefficients Kxy and Kyx are equal in magnitude and have the same sign. Tripp and Murphy [8] have shown that cross coupling of this nature is not destabilizing. This was shown from computation of the energy generated on a per cycle basis for the Kxy and Kyx represented by Equation (2) shown in a previous section. A positive (E) results in energy addition to the system, and therefore, is regarded as destabilizing. Since both cross coupled coefficients are of the same magnitude and sign, (E) will be zero, and therefore has no effect on stability.

Bearings utilized in gears have significantly different loading conditions than bearings in most other turbomachinery applications. By virtue of their design, gears are exposed to wide load swings which vary in magnitude and direction. An appropriate bearing configuration should account for all these conditions in order to ensure stable and reliable operation. While the example considered here does not encompass every aspect of bearing design for gear applications, it does point to the major factors that should be considered. The stability characteristics of the three most commonly used fluid film bearings in gears were also demonstrated.

Tilt pad bearings were shown to be superior to the pressure dam and sleeve bearing configurations, when stability and load variations are major factors. Gear manufacturer's generally prefer the use of plain sleeve bearings or pressure dam bearings. These bearings are generally acceptable under full load conditions, but not appropriate when the load changes or when the particular mode of operation in certain applications requires the machine to run unloaded during initial start up.

The use of bearings for gears should have a complete rotor bearing dynamic analysis, in addition to the static bearing load analysis. This would ensure arriving at an optimum bearing configuration for the particular application.

BEARING FAILURE ANALYSIS

When machine components fail, the impacts on the production loss and maintenance costs are usually high. The machine's online factor is directly related to the reliability and performance of the machine's critical components, and therefore, failures must be eliminated or reduced to maintain a high online factor. Failure analysis is, thus, utilized to pinpoint the fault and outline the means of eliminating it or reducing its frequency. In some cases the failure cannot be totally eliminated, but the failure analysis can help in determining the cause and mode of failure thus making it more predictable and allowing for a planned replacement of worn components. This can also aid in preventing a secondary type damage from taking place.

Failure analysis is therefore, an investigation into a problem to determine the cause and possible corrections or modifications to eliminate or reduce the consequences of the failure. The objective is the final improving of the reliability of the equipment, and not finding someone to blame for the failure. This is the main objective and all concerned personnel must not let this fact fade away from their minds in the midst of searching for the cause of failure.

Steps of Failure Analysis

The steps normally taken in a failure analysis can vary depending on the nature and urgency of the problem. The following list outlines steps which are typical of the procedures generally used in the industry.

- Preliminary visual examination of the failed component. This should also include any specific conditions found upon disassembly of the failed components. Care must be taken in this step to ensure that all the relevant details are not lost. Visual examination is the first line of enquiry. The person making the visual observation should be cautioned not to rush into making a quick conclusion. Often, the real cause of failure may be hidden beyond the obvious damage. Therefore, close examination of all the details visible and hidden is very essential.

- Photographic records are an essential part of any failure investigation. This is important for future reference, and is a good record keeping practice. It provides a permanent record of the bearing failure, and makes it possible to further examine details that might have been overlooked in the preliminary visual inspection.

- Detailed laboratory analysis can also be necessary in some situations. Oil samples can be analyzed to ensure that they are within specifications. Analysis of embedded dirt particles in the

babbitt can help determine their composition, and subsequently, their source.

• Macroscopic examination might also be necessary in a certain situation to provide a more concrete evidence, and further confirm the mode of failure.

• Collection of all operating and background data is an essential step of any investigation. This includes vibration levels, oil outlet and bearing metal temperatures and pressures, and any relevant incident that preceded the failure. The history of prior failures, and knowledge of the type of maintenance and its frequency can be helpful. Such information can greatly aid in arriving at the right conclusion, and reduce the amount of guessing required.

Material specifications and drawings should be obtained to further study the problem. Recent modifications to the equipment or any other related parts, are also of importance. Changes in the operating conditions compared to design conditions should also be investigated as to the part they might play in the failure. It is often more than one single factor that combine to result in a failure. Therefore, knowing all the factors involved can be informative in reconstructing the failure progression. This can also be instrumental in defining the options available for a cure or a solution.

• Once all the analysis and data has been reviewed, the sequence of events leading to the failure must be reconstructed. There might be more than one possible scenario for the failure. Investigations might not always involve a series of clear cut steps. Logic and deduction must be relied upon in such instances to arrive at a possible failure mechanism. If the probable cause of failure is apparent early in the examination, the pattern and extent of subsequent investigations will be directed toward confirmation of the probable cause and the elimination of other possibilities. Other investigations will follow a logical series of stages, and the findings at each stage will determine the manner in which the investigation proceeds. As new facts modify first impressions, different hypothesis of failure will develop and will be retained or abandoned as dictated by the findings. In some instances where the cause of the failure does not show resemblance to any failure that the particular investigator have experienced in the past, recourse to the published literature might be required to shed some light or suggest possible clues.

In some cases, work on a certain aspect of the failure might not be seen as necessary to confirm the particular failure mode being sought, but can be helpful in eliminating some of the other possible causes from consideration. Before the final conclusion is reached, supplementary data confirming the original opinion should be reviewed. The operating as well as the maintenance personnel involved with failed equipment should be involved in the formulation of the conclusion as a guarantee that no relevant data or information have been overlooked. Their comments and suggestions on the possible remedies might also be very valuable, since they are the ones who will implement the modifications or cure, and can point out certain practical aspects of which the investigator might not be aware.

• Once the failure mechanism has been defined, and the causes that lead to it have been revealed, the process of developing or coming up with recommendations to eliminate or remedy the problem must start. If a modification is required, one should ensure that the new modification, which will eliminate the existing problem, does not create another problem.

• Final report: The failure analysis must conclude with a written report for documentation purposes if for nothing else. The report, if lengthy, should have a summary or an abstract which contains a brief and simple description of the failure and recommended fix. Although failures might differ significantly and therefore, their associated report might differ in content and order. A report should in general contain the following sections:

· Description of the failure and the service conditions at the time of the failure. This should include all relevant incidents that were directly or indirectly determined to be related to the failure.

· Photographs, drawings, and any illustrations that can provide an adequate description of the failure mode.

· Background information and previous failures that are judged to be related to the current failure.

· Summary of the metallurgical and other laboratory analysis which provide evidence to support the cause of the failure.

· A brief description of the mechanism that caused the failure.

· Conclusion and recommendations to prevent or eliminate such a failure in the future.

The report must be as simple as possible, yet not eliminating any of the relevant information. It is important to note that every failure is unique in some way, and the procedure outlined herein does not apply to every failure case. Furthermore, the order in which the failure investigation proceeds can vary from one failure to another.

Bearing Failures

Bearings constitute one of the most critical components in turbomachinery. The safe and reliable operation of a rotating machine depends, to a large extent, on the success and performance of the bearing installed. Many of the bearing failures are not necessarily caused by a bearing fault, but can be attributed to a malfunction in the machine itself, or to the mode of operation. However, regardless of where the fault is, it is usually detected at the bearings, because by design, they are made to be more compliant than the rest of the elements in a rotating machine. Fluid film bearings operating in the hydrodynamic lubrication region are expected to have an infinite life. This is because the journal and bearing surfaces are separated by an oil film and, thus, no wear of adjacent parts takes place. Unfortunately, there are many other parameters that tend to interfere with the prescribed operation of the bearing and lead to its failure. It is very important is such instances for the operations or maintenance personnel to recognize some of the common premature bearing failures, quickly identify the problem, and apply the corrective action to prevent further failures.

The following is a description of the most common bearing failures and some of the possible causes and recommended corrective action. These should be used as a guide and not in a definitive manner, since bearing failures are generally complex and can be attributed to several failure modes which combine to cause a failure.

Scoring Due to Foreign Matter or Dirt

Bearing failures due to dirt in the oil system is one of the most common causes of failure. The damage can range from light wear of the babbitt surface to severe scoring of the journal and bearing surfaces depending on many factors. These include the size and amount of dirt, the bearing material, babbitt thickness, and bearing clearance as well as operating eccentricity. Dirt can get into the oil system during maintenance work, or be ingested through breathers or air filters. Dirt can also come from metallic wear particles resulting from abrasive wear of moving parts, or could be present in the oil distribution headers at the time of assembly, but become dislodged during operation. A common misconception regarding oil filters, is the general belief that the micron rating is the minimum diameter of particles that can go through the mesh. This is not true, because the rating is an average value which means that larger dirt particles can pass through the filter mesh. The statistical average is shown in Table 7 of particle sizes that can pass through various sized micron filters.

Table 7. Contamination Levels for Hydraulic Fluids.

Size range (μm)	(Particles/100 m) Contamination class 0	1	2	3	4	5	6
5—10	2,700	4,600	9,700	24,000	32,000	87,000	128,000
10—25	670	1,340	2,680	5,360	10,700	21,400	42,000
25—50	93	210	380	780	1,510	3,130	6,500
50—100	16	28	56	110	225	430	1,000
>100	1	3	5	11	21	41	92

Note: For Steam Turbines Contamination Class 6 has been generally found to be satisfactory although Class 4 and Class 5 are more desirable.

Embedded metallic particles can be identified by specific characteristics associated with the particular metal of which the dirt is made. This could be of importance in order to determine the source of the contamination, and possibly the means by which it entered the system. Aluminum dirt particles are usually soft enough to embed in and conform to the bearing in flake like shapes. A drop of caustic applied to the aluminum will cause hydrogen gas evolution readily visible under low magnification. Cast iron chips first embed in the bearing material intact, then are likely to fragment along the weak graphite flakes into clusters of smaller chips. This differentiates cast iron chips from steel chips, which usually remain intact. Drillings, turnings, and grinding chips each have their own characteristic shape and size. If further discrimination of embedded particles is required, a specimen of the bearing needs to be sectioned as described by Harvey, et al. [9]. The specimen should be flattened before it can be lightly polished by hand, using the wet metalographic polishing wheel surface (not rotating as a hand lap). Inspection under the microscope should give an idea of the nature of the finer particles embedded in the babbitt or liner material. Any vitreous abrasive material observed must have been embedded in the bearing during service, because this method of omitting all abrasive papers precludes the trapping of extraneous grit. Further polishing of the specimen by the use of the rotating wheel and polarized light can determine if the embedded material is sand or alumina. Embedded metallic particles can often be identified by shape and color or some of the methods used in standard metalographic specimens.

Figure 33. Severe Fretting of Bearing Shell O.D.

Faulty Assembly

Misassembly can be traced to many of the bearing failures. The failures could be due to excessive or insufficient crush, shifting of the bearing cap, misalignment of oil holes, or bearing halves reversed. It is very important in such instances to pay extreme care when the bearing is removed to determine if the failure is assembly related. Examples of the typical failures related to assembly problems are outlined in the following subsections:

Loose fit. Inadequate interference fit on thin shell bearings causes excessive flexing and fretting damage to the O.D. of the shell and to the housing bore. The severe fretting due to insufficient contact pressure is shown in Figure 33 where local welding and tearing can be seen to have taken place between the thin bearing liner and the housing. Fretting on the housing bore is shown in Figure 34. These fretting protrusions must be completely removed before a new bearing liner is installed to prevent the possibility of seizure. Warriner [10] shows fretting damage at the bearing shell joint faces. This is shown in Figure 35 and is caused by the bolts slackening off during service. Insufficient crush, on the other hand, can result in the appearance of a highly polished area on the back of the bearing shell as shown in Figure 36. Other possible causes for the insufficient crush could be due to filing of parting surfaces or bolts not bottoming in a blind hole. Excessive use of sealing compounds at the split lines can cause the loss of interference or crush.

Excessive interference. While it is important to prevent from having a loose bearing shell, care must be taken not to have excessive crush. As the contact pressure is increased for a given bearing size, the hoop stress increases to the point where the steel backing begins to yield adjacent to the joint faces. In certain instances, the excessive crush can cause the bearing shell to bulge inwards at the parting line joints. Such a failure can usually be recognized by the excessive wear and wiping along the bearing surfaces adjacent to one or both of the parting faces. A bearing that exhibits the failure characteristic due to excessive crush or interference is shown in Figure 37.

Misalignment

The amount of misalignment a sleeve bearing can take, depends to a large extent on the loading and, subsequently, the minimum film thickness, in addition to the bearing length. The misalignment a sleeve bearing can accept is generally very small. Misalignment can cause edge loading and excessive wear of the bearing surface. This problem is recognized by a distorted wear pattern as shown in Figure 38.

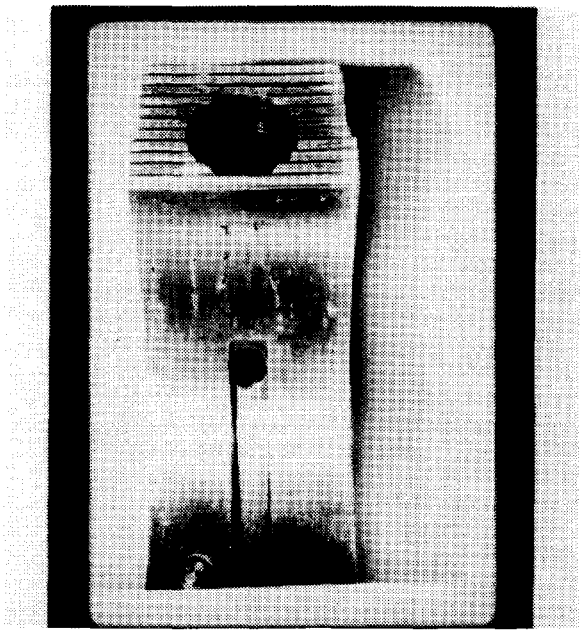

Figure 34. Fretting on Bearing Housing Bore.

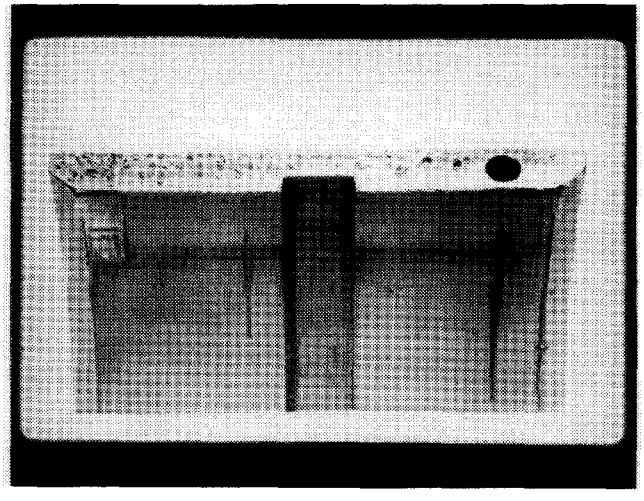

Figure 35. Fretting on Joint Face.

Inadequate Lubrication

Inadequate lubrication can result from oil starvation, chocking of oil filters, insufficient clearance, malfunction of oil pump or oil pressure relief valve, oil dilution by fuel or water, and overheating of the oil cooling system. Power failures can result in wiping of bearings due to inadequate supply of oil during coastdown. This can take place if the standby oil pump does not take over, particularly in the absence of a rundown or coastdown overhead tank. Inadequate lubrication prevents the bearing from operating in the full film hydrodynamic region and causes metal-to-metal contact or operation on very thin oil film. The friction and wear will rapidly increase which in severe cases causes bearing seizure and eventual wiping of the babbitt around the complete circumference of the bearing.

Bond Failure

Although not very common, bond failure can still be detected on some bearings. It is usually characterized by a complete separation

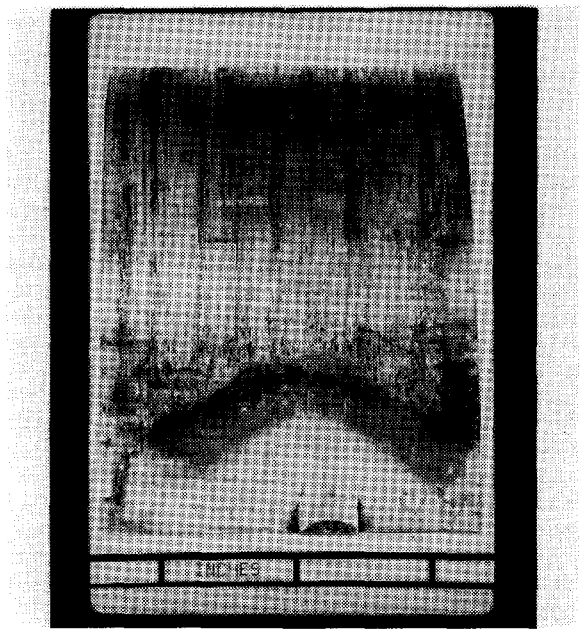

Figure 36. Polished Surface Due to Loose Fit.

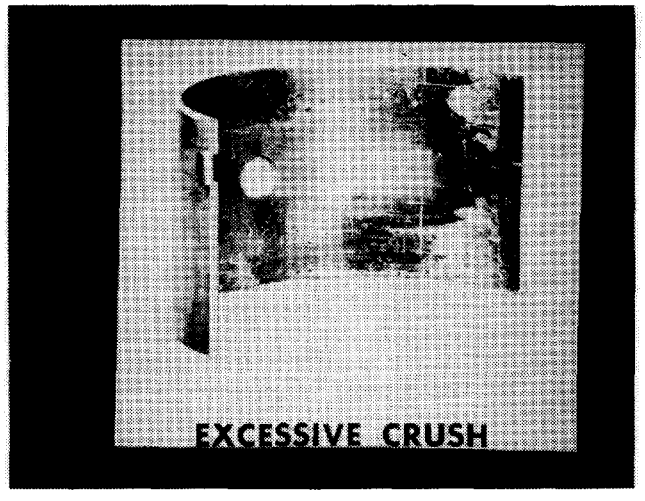

Figure 37. Wiping Due to Excessive Crush.

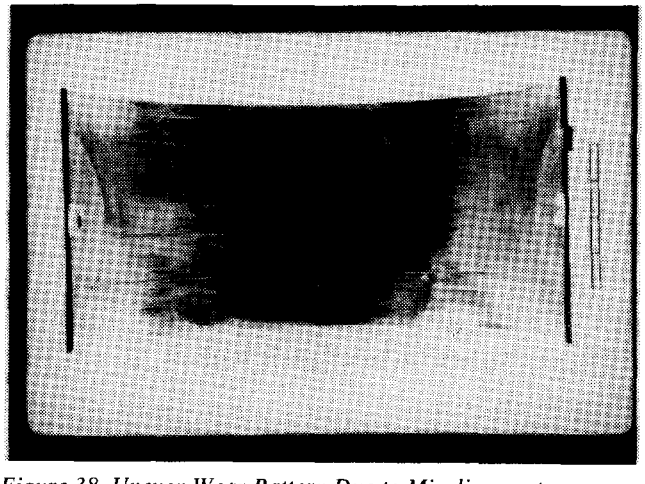

Figure 38. Uneven Wear Pattern Due to Misalignment.

of the babbitt from the backing material. High temperatures can cause the babbitt to melt near the bond line and then separate under the combined effect of dynamic loading. Babbitt separation can be caused by lead contamination. A maximum limit of 0.35 percent lead is specified for ASTM B23 tin base babbitt. The presence of lead with tin causes the formation of a tin lead eutectic complex. This eutectic has a melting temperature of only 360°F, which is approximately 90°F lower than the melting temperature of tin. Inadequate surface preparation and/or inadequate pouring temperatures, can also lead to bond failure or to a weak bond due to the formation of tin oxides. Surface contamination of the backing material can present a problem, especially on repaired or reconditioned parts, because of the difficulty of degassing and cleaning the surface. Inadequate fluxing can also result in the formation of oxide films on the base metal, resulting in a weak bond. The metallurgical bond through static or centrifugal casting is always superior to a mechanical bond. This eliminates the need for anchor grooves which have been known to trap air and oxides, impede heat flow, and distort the babbitt surface. Ultrasonic inspection is one of the common nondestructive techniques utilized to check the bonding. Destructive methods are numerous, but are typically used when a shop is trying to qualify its techniques.

Diffusion. Tin in the babbitt layer has a tendency to diffuse towards the backing material. This diffusion is a time dependent process, but is accelerated with higher operating temperature. The babbitt layer will with extended service time become depleted from its original tin content. This will ultimately lead to the reduction in the resistance to corrosion and a significant decrease in the wear and fatigue resistance. Ultimately, the bonding will become weakened and the babbitt layer will peel off cleanly from the backing material and separate. A barrier is often used to delay the diffusion process. The two most commonly used barriers are Nickel and Brass. Jones [11] tested overplate tin loss due to diffusion for "no" barrier, nickel barrier, and brass barrier. These results are reproduced in Figure 39. In this test the bearings were heated to (220°C), which is much higher than experienced under service conditions in order to reduce the test period and accelerate the diffusion process. There is still a significant research directed at finding better barriers than the ones commonly used today [12]. Some have been shown to perform better from the diffusion standpoint, but their attributes as a bearing material are not proven yet.

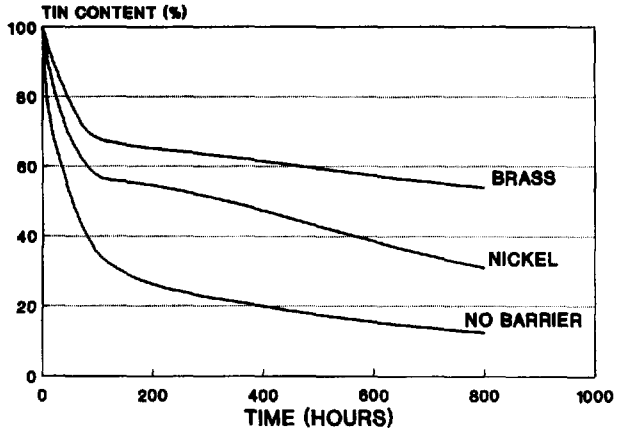

Figure 39. Tin Diffusion Into Backing Material.

Overloading

Overloading of a bearing can cause wiping or fatigue of the bearing surface, depending on the type of overloading. If the overload is due to excessive rotor weight for the particular bearing size, excessive belt tension on belt driven equipment, or high gear reaction forces, the bearing surface will exhibit wiping damage, as shown in Figure 40. Such overloads are unidirectional and do not cause the fatigue type failure which is also caused by overloading, but where the nature of the loading is cyclic or dynamic. Cyclic or dynamic type loading is typical of bearings in reciprocating machinery applications, and in turbomachinery applications experiencing high vibrations. The cyclic nature of the loading, particularly when excessive will over time cause fatigue type failures. Fatigue failures in bearings initiate cracks at the babbitt surface, as illustrated in Figure 41. The cracks will propagate towards the bond line. Just above the bond line, the cracks will turn and run parallel to it, eventually joining with other cracks causing flaking of the babbitt. The distinct characteristic which separates failure due to fatigue from a bond type failure lies in the fact that a small layer of babbitt remains attached to the backing material where as in a bond failure the backing material is exposed and the babbitt completely separates. The photographs shown in Figures 42 and 43 are typical failures caused by fatigue of the bearing surface due to high dynamic loading.

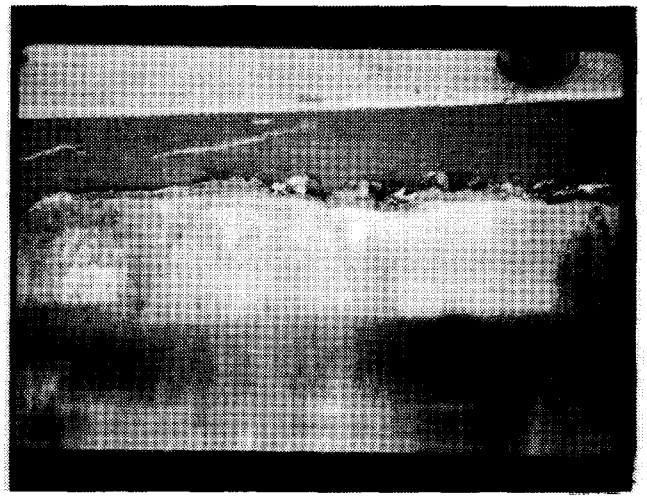

Figure 40. Babbitt Wiping Due to Static Over Load.

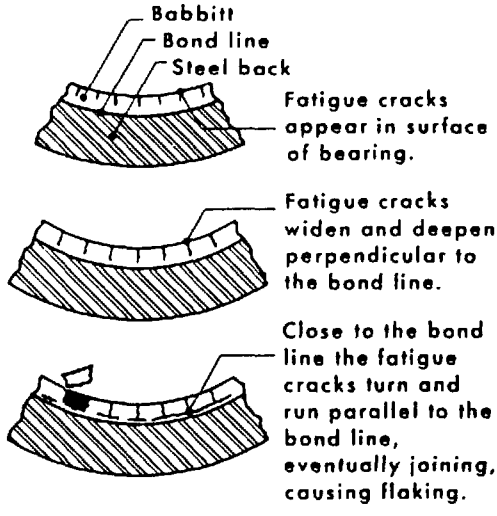

Figure 41. Illustration of Fatigue Failure in Babbitted Bearings.

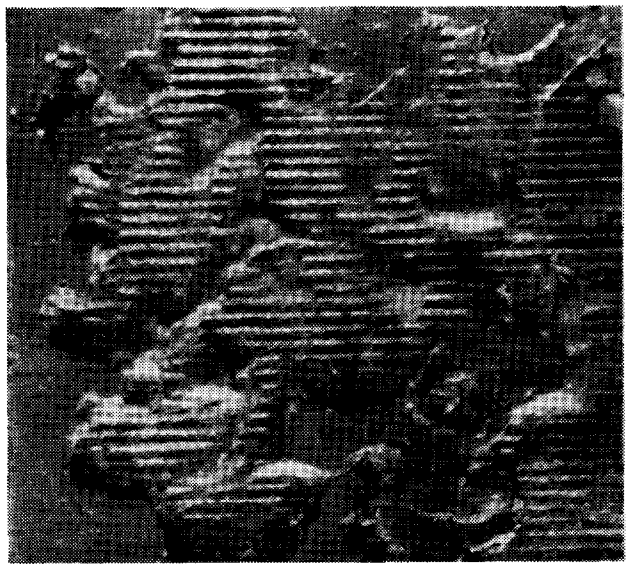

Figure 42. Fatigue Failure on a Plain Sleeve Bearing.

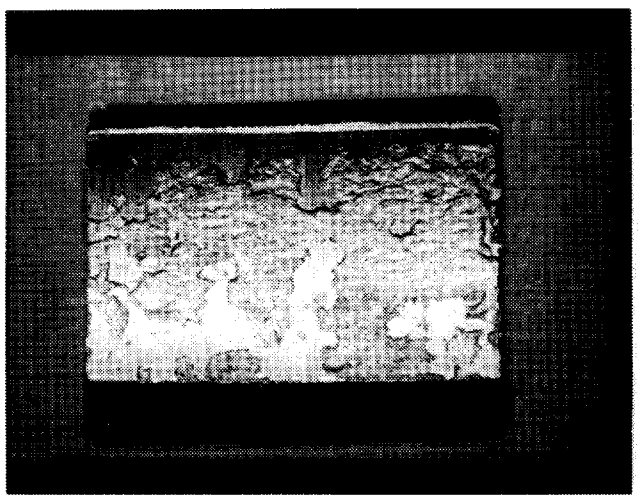

Figure 43. Fatigue Failure on a Tilt Pad Bearing.

Traditionally, babbitted bearings in steadily loaded applications have a rather thick layer of babbitt. The thick layer of babbitt on steel backing is usually utilized to ensure deformability and embedability. The ability of the babbitt material to deform and embed dirt is very important when dirt cannot be prevented from entering the bearings. The ability of the bearing to embed considerable quantities of dirt increases with the babbitt thickness and can prevent bearing seizure. Unfortunately, this characteristic (thick babbitt) is not favorable from the fatigue point of view. The fatigue strength reduces considerably as the babbitt thickness increases. This is demonstrated in the bar graph shown in Figure 19 and with the combined effects of temperature in Figure 44. Although steadily loaded bearings are designed based on the static loading, eventually, a machine will experience some deterioration in its balance quality, and dynamic loading must then be included in the analysis. The dynamic loading has become more important as recent machines are required to run at higher speeds and for longer periods between overhauls. The preference for thick babbitt have diminished with the recent upgrading to better lube oil filtration which virtually eliminated the need for designing the babbitt to embed the dirt in the oil. However, the industry is conservative by nature and slow in adapting to changes. This is reflected by the continuing use of thick babbitt on many of the bearings in use today. The use of thin babbitt on bronze backing is gaining more acceptance, and has demonstrated superior fatigue strength properties. Furthermore, the bronze will serve as a good bearing material in the event the babbitt is lost due to shaft currents, erosion, or excessive wear.

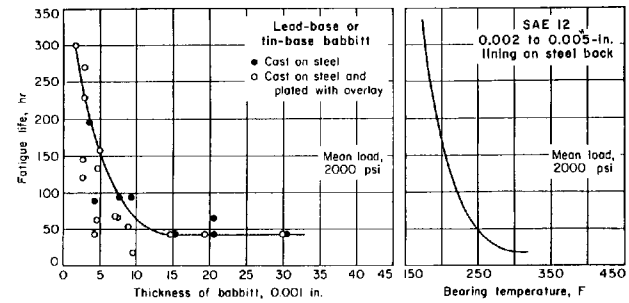

Figure 44. Combined Effects of Babbitt Thickness and Temperature on Bearing Fatigue Life.

Porosity and Blisters

A 1964 journal article [13] separates porosity defects into several distinctive categories:

Foreign inclusions. Cavities occur from inclusions such as slag or dross from the melting pot being trapped within the structure. This is the most common defect. Such inclusions create a weak structure, sensitive to fatigue cracking.

Absorbed gas. Cavities or blisters can also be caused by evolution of gases during the solidification of cast metal. When high lead babbitt is cast onto a cast iron backing, small cavities might develop. Photomicrographs can often reveal that the pinholes or cavities were caused by absorbed gas escaping from graphite flakes close to the babbitt iron interface. There is a higher probability of this occurring if the cast iron surface had not been degraphitized prior to casting the babbitt, thus, gases produced at graphitic foci during pouring were trapped within the babbitt microstructure.

Dissolved gas. Some gases are soluble in molten metal and are rejected upon freezing, causing blisters. Molten aluminum alloys have a marked tendency to absorb hydrogen from anything near the molten surface that can liberate hydrogen. This would include atmospheric water vapor or organic materials such as oil hydrocarbons. When the melt freezes, most of the dissolved hydrogen is rejected, but some becomes trapped in pores throughout the microstructure. As this trapped hydrogen can be expelled upon heating, engine operating temperatures are sometimes sufficient to raise the bubbles or blisters in an overlay structure.

Powder impurities. Porosity can arise from impurities in the metallic powders which are compacted to produce sintered structure bearings. Each particle of organic matterlint, paper, wood splinters, etc., produces gases and carbonized residues at sintering temperatures, thereby creating a small void.

Hydrogen electroplating. Gases, usually hydrogen, may accumulate under the electrodeposit, especially when the base support is steel. When certain metals, such as chromium copper, silver, and cadmium, are electroplated onto steel, the potentials are such that hydrogen has a tendency to "plate out" concurrently with the primary metal. Some of this hydrogen gathers into bubbles in the plating solution; some diffuses into the steel base which, when unalloyed, is quite "transparent" to atomic hydrogen. When electroplating is completed, subsequent heating must frequently be employed to expel the hydrogen, which otherwise can lead to

embrittlement of the steel. If the metal plated on the steel is not sufficiently porous, atomic hydrogen beneath the plating collects in molecular form with sufficient pressure to push up the plating, thereby forming blisters. If the plating is soft and thin (such as a lead overlay) the blisters often break, creating a pitted surface.

Lead Sweating

Misalignment or overload, often in combination with high operating temperatures, sometimes results in plastic deformation of the babbitt layer with no visible cracking. When this occurs in copper lead bearings, the lead phase, being relatively soft, can be squeezed from or "sweated" out of the structure.

Wire Wool and Scab Formation

Wire wooling or black scab is an unusual type of bearing failure characterized by a high rate of wear without evidence of a high coefficient of friction and often not accompanied by seizure. The first failures were associated with three percent cr. 1/2 percent mo steel shafts, most with some vanadium added. Other failures occurred with 18/10 cr. - N austinite and some with 12 percent cr. ferrite steels. An especially strong actor is 17-4 Ph steel which always needs chrome plating to survive in the journal areas.

These failures are sudden and seem to be associated with an initiating mechanism, which then develops into a typical self propagating machining type process, whereby the shaft is machined away rapidly by an extremely hard scab embedded in the babbitt. The scab builds up from accumulated shaft turnings, which consist mainly of iron carbide. The most prevalent initiating mechanisms are foreign metallic particles. These break through the oil film and establish running contact. The bearing is shown in Figure 45 with deep melted cavities with scab embedded. The mating shaft had deep grooves after a relatively short running time.

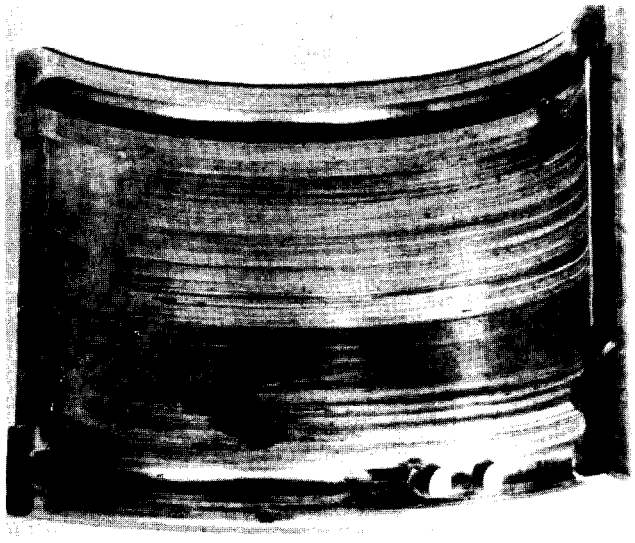

Figure 45. Hard Black Scab in a Babbitted Journal Bearing and the Mating 3 percent Cr. 1/2 Percent Mo. Steel Shaft.

Chromium steels seem to be the most susceptible, probably because of their relative ease in being scuffed and of transferring metal during rubbing contact, along with the fact they carburize more readily than other steels.

In many test runs, a correlation is shown to exist between shaft hardness and scab failure. The harder shafts resist scab formation.

Thermal Ratchetting and Babbitt Creep

Creep occurs in highly loaded bearings in the vicinity of the minimum film thickness when the local oil film pressure approaches the bearing material yield strength at the local surface temperature. The combination of high load and temperature effects can lead to babbitt creep, which is also referred to as thermal ratchetting. The oil film will induce a rippled pattern as a result of flow in the babbitt. The lack of smearing or other evidence of general metal-to-metal contact suggests that fluid film action alone in combination with the high temperatures causes the flow in the babbitt surface. Booser, et al. [14], provided the following limits which can be used as a guide to prevent from operating at conditions that can lead to such a failure mode. An upper limit of 260 to 270°F for bearings operating at 1000 psi unit loading. For lower loading applications, the temperature limit is typically above 370°F which is outside the operating range for most turbomachinery bearings. This shows that thermal ratchetting can only occur on units exceeding the standard design limits. The babbitt creep is related to the yield strength of the babbitt in the zone of maximum subsurface shear stress. The babbitt thickness tested by Booser, et al. [14], was approximately 0.25 in. Higher bearing loads are possible within a given temperature limitation for very thin layers of babbitt, where the maximum shear stress occurs in the backing material. Evidence of thermal ratchetting and babbitt creep on a thrust pad is shown in Figure 46.

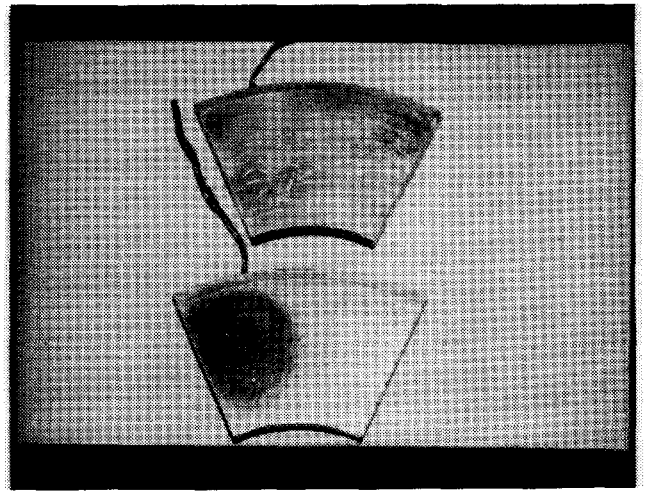

Figure 46. Thermal Ratchetting and Babbitt Creep on a Thrust Pad.

Corrosion

Corrosion in bearings can result from the chemical attack of the bearing alloy by corrosive compounds in the lubricant. These compounds can originate from external contaminants that find their way to the lube oil system, or from internal contaminants which form during operation of the machine, as a result of lube oil degradation and oxidation. Corrosion due to oxidation of the lube oil is not as frequent today, since lubricant additives have been developed to inhibit oxidation under severe operating conditions and for extended periods of time. Oxidation might, however, still occur if the oil analysis is not monitored and the oil is allowed to degrade. Oxidation may be accelerated by high temperatures and by exposure to air, water, or foreign materials in the oil. When lubricants become corrosive as a result of an accumulation of acids and peroxides, lead is removed from the copper lead bearing alloys. If both copper and lead are attacked and metallic sulfides are present in the corrosion products, this usually points to sulfur

compounds as the corrosive element. The sulfur compounds can originate from the fuel system in internal combustion engines, seal leaks into the lubricating system in centrifugal compressors, or come as a result of an extended operation at high temperatures. These factors lead to the decomposition of sulfur compounds in the oil additives. Once decomposed, these compounds become very corrosive. Some bearing designs utilize an overlay over the copper alloy bearing to particularly guard against such a corrosive attack.

Some corrosion failures can be mistaken for fatigue type failures. This is because cracks can show on the surface of the bearing as a result of a corrosion attack as shown in Figure 47. This bearing displays corrosion damage in the form of pits, and in the closeup photograph of Figure 48, cracks are seen joining different pits. Corrosion can be confirmed in such instances by taking microsections as shown in Figures 49 and 50 for the sintered copper-lead and the cast copper lead, respectively. In both micrographs, cracks can be seen to be propagating by joining up the lead depleted areas. The lead depleted areas are recognized by the black areas in the photographs. The presence of surface cracks gives the bearing the appearance of fatigue damage, but a microsection can help differentiate between the two forms of failure.

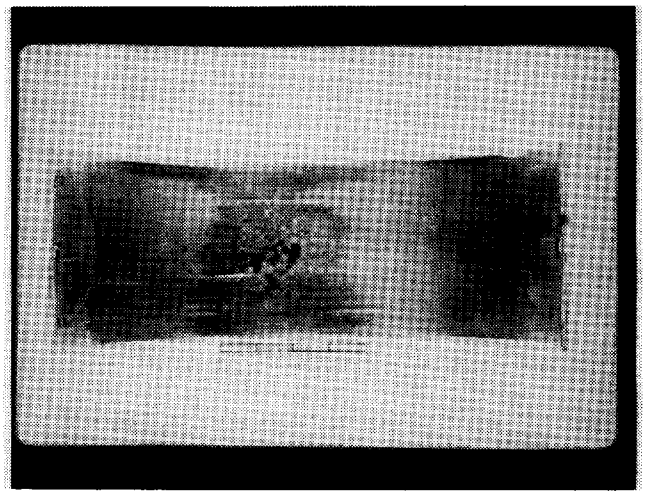

Figure 47. Pits and Cracks on Bearing Surface Caused by Corrosion.

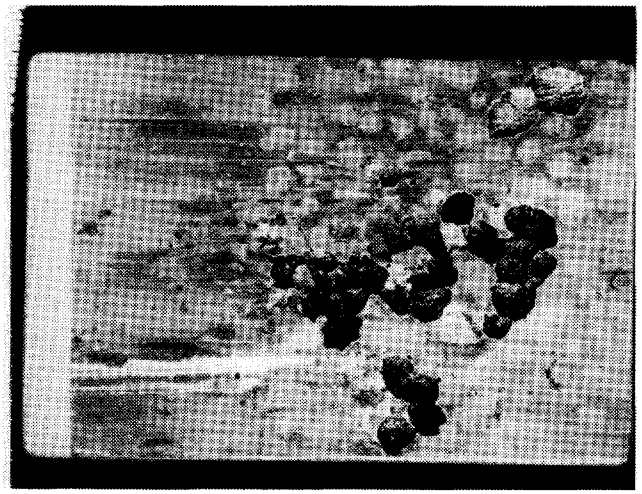

Figure 48. Closeup View of the Corrosion Attack Shown in Figure 46.

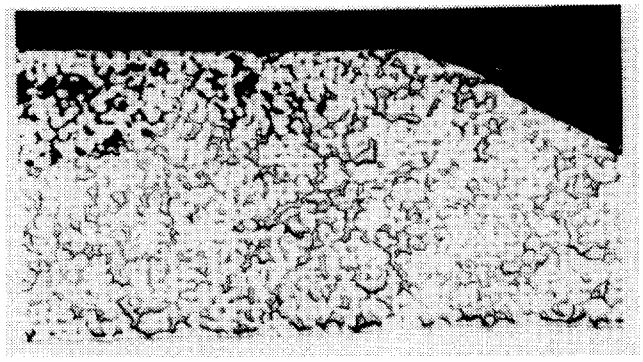

Figure 49. Microsection Showing Corrosion of the Sinter Copper Lead Structure.

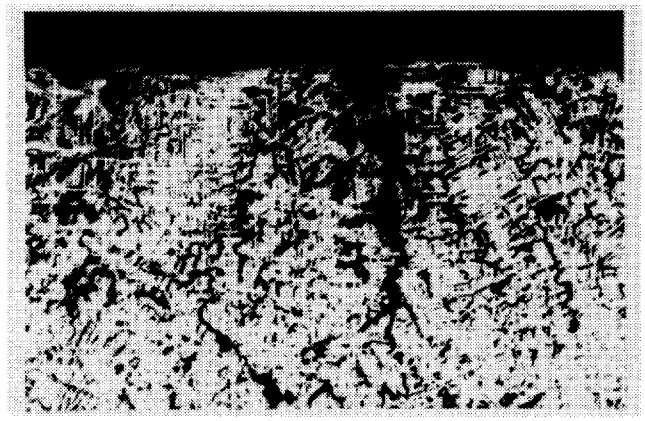

Figure 50. Microsection Showing Corrosion of Cast Copper Lead Structure.

The following case shows how more than one failure mechanism combines with other modes to bring about an accelerated failure of the bearing. This also emphasizes the importance of not coming to a quick conclusion based on visual observation of the damaged area. The physical appearance of the bearing in this case showed cracks at the babbitt surface. These cracks are clearly seen in the micrograph in Figure 51. Although the most probable cause for the failure can be attributed to fatigue, further detailed investigation revealed the true source for the failure of the bearing. Hydrogen sulfide gas (H_2S) leaking from the compressor seals into the lube oil system attacks the tin-base babbitt. The H_2S will react with the tin, copper, and antimony alloys in the babbitt forming a layer of copper sulfide on the bearing surface. Diffusion of the copper to the surface of the babbitt layer and its removal in the form of copper sulfides will affect the bearing clearance, the bearing lubricity, and the strength of the remaining bearing metal. The end result may be overheating, extrusion, and fatigue of the bearing metal. In this case, a micrograph of a sectioned piece revealed that the babbitt layer had lost copper which migrated towards the surface and formed a sulfide deposit. Some of the copper tin phase (Cu6Sn5) appeared to have dissolved into the matrix, while copper from the matrix had diffused to the surface and formed copper sulfide deposit. Energy dispersive spectroscopy (EDS) revealed that copper was being lost from the zone near the surface. The microhardness impressions shown in Figure 52 revealed how the babbitt surface zone, which had become almost devoid of the Copper tin (Cu6Sn5) phase, was considerably softer than that nearer the steel backing. From the micro-hardness tests the zone near the steel back was estimated to be about HB25 and the zone

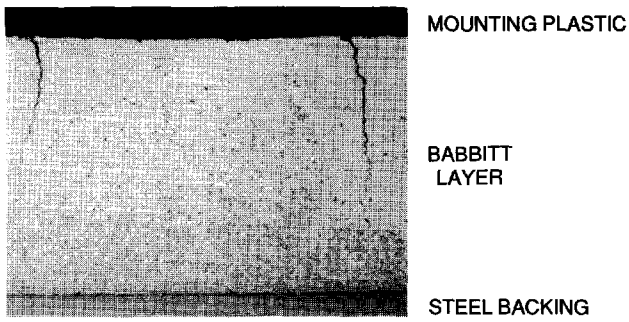

Figure 51. Cracks in the Babbitt Layer of a Sleeve Bearing.

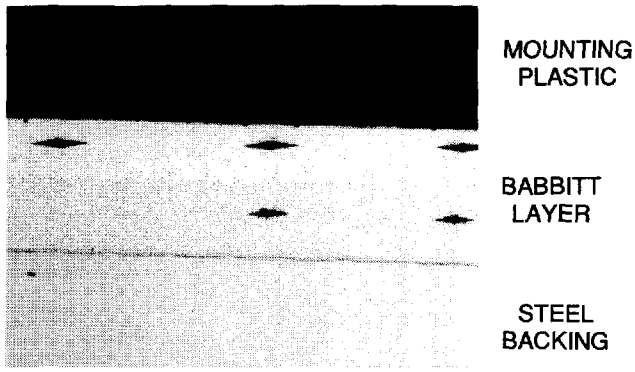

Figure 52. Micro Hardness Impressions on the Babbitt Layer.

near the surface about HB15. The chattered appearance noted was caused by differences in hardness from an irregular loss of the copper-tin phase along the bearing.

The Lubrication article [13] identifies two common types of corrosive agents that attack most bearing alloys. These are organic acids and electrolytes.

Organic acids. These are derived from oxygenated or oxidized hydrocarbons. Organic acids usually attack lead base babbitt. Pure lead is susceptible to being corroded, however the usual formulations of high lead babbitts contain sufficient amounts of the hardening elements, antimony and tin, to provide good corrosion resistance. Lead alloys in which the principle hardeners are calcium, aluminum, or magnesium are sensitive to corrosion by organic acids. They usually contain more than 97 percent lead and generally are restricted to certain large diesel engines. Tin base babbitts are unaffected by most organic contaminants. Lubricating oil also oxidizes under conditions of aeration, high temperatures, prolonged usage, and catalysis to form reaction products which have a solubilizing action, especially upon lead and cadmium. Most oil lubricants contain additives to retard oil oxidation and to protect bearing alloys against corrosive contaminants. When overextended usage depletes the protection afforded by such additives, the stage is set for bearing corrosion to begin.

Electrolytes. Water solutions of salts, acids, or alkalis can corrode bearing alloys as well as steel journals. The corrosive effects might be pitting with removal of surface metal, or oxidation where the bearing surface converts to an oxide film. The tin oxide layer becomes appreciably harder than the babbitt base. The oxide surface is also more brittle than the babbitt alloy and has poor frictional properties. Pieces of oxide can crack loose from the babbitt, become wedged in the bearing clearance, and cause hot spots, ultimately leading to complete failure.

Tin base babbitt is resistant to corrosion by organic acids that develop in used lubrication oils. It is not resistant to acid chlorides, hydrochloric acid, or hydrogen sulfide (H_2S). These contaminants can find their way to the bearing surfaces through failures in the seal oil system. The babbitt surface of a journal pad where corrosion was accelerated by the turbulence at the pad leading edge due to entrance effects is shown in Figure 53. The same corrosion mechanism is shown on a thrust bearing pad in Figure 54. The "comet tails" seen in the bearings resulted from turbulence around embedded particles that had subsequently been dislodged or had corroded away. Most of these particles are believed to have been steel, and although some abrasion from the embedded particles had also contributed to the distress of the components, the very few abrasive particles that were found embedded indicated that abrasion was a lesser problem than the corrosive nature of the distress. The corrosion erosion caused by the acid in the lubricating oil provided good visualization of the flow field over the pads.

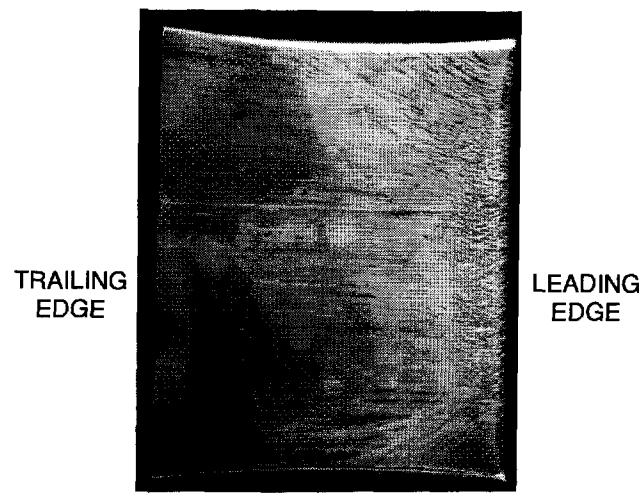

Figure 53. Erosion Corrosion on a Journal Pad.

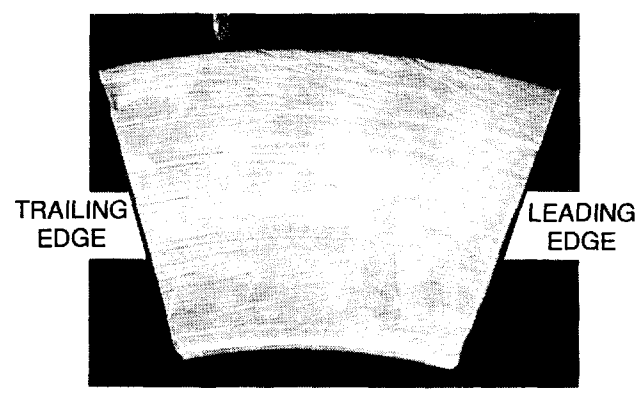

Figure 54. Erosion Corrosion on a Thrust Pad.

Cavitation

Vapor cavitation is defined as the process of boiling in a liquid as a result of pressure reduction rather than by external heat addition. However, the basic physical and thermodynamic processes are the same in both cases. Severe erosion damage to the adjoining metallic surfaces can occur upon the vapor bubble collapse, as a result of the large implosive forces that are confined to a small area. This type of cavitation is not generally associated with steadily loaded journal bearings. These normally experience gaseous cavitation, or more appropriately called ventilated cavita-

tion in which air from the atmosphere or dissolved gases are drawn into the divergent clearance space where the pressure is close to ambient pressure. In certain conditions however, a misapplication or inadequate placement of the feed groove can lead to conditions favorable for the formation of vapor type cavitation resulting in cavitation erosion damage. Cavitation damage to a sleeve bearing in which the feed groove was located very close to the load vector is shown in Figure 55. A relatively high load carried by a reduced bearing area due to the presence of the groove in the load region, results in a very thin oil film and high localized pressure. Consequently, the oil cavitates in the diverging section of the bearing and generates vapor bubbles. The bubbles appear to have travelled a short distance downstream and collapsed as the pressure started to build and increase above the vapor pressure of the oil. The bubble collapse caused the cavitation erosion damage shown in Figure 55. A typical pressure wave for a squeeze film damper bearing (dynamically loaded bearing) experiencing vapor type cavitation is shown in Figure 56. It is important to note the instantaneous increase in pressure as the vapor bubble collapses. While in a steadily loaded bearing the damage is narrowed down to a small region in the diverging section of the bearing, in dynamically loaded bearings the cavitation damage can, depending on operating eccentricity, extend circumferentially all around the bearing surface, since the pressure wave rotates with the journal. Cavitation in journal bearings can be controlled and minimized by proper location of the feed grooves, or increasing the supply pressure to the bearing. The cavitation resistance of bearing materials is very much like fatigue resistance. The harder the alloy material or the thinner the babbitt, the more resistant it is to cavitation damage and erosion. Cavitation conditions are enhanced by the presence of contamination in the oil which could be in the form of entrained air or water. This entrained water or air acts as a nucleation site for the vapor cavitation bubbles. The presence of water in the lube oil reduces the vapor pressure and allows cavitation to occur more readily. The effect of air bubbles can have opposing consequences depending on whether the air bubbles are dissolved or entrained in the oil. It is a proven fact that injection of air bubbles is one of the effective methods utilized for controlling cavitation damage in hydraulic machinery [15].

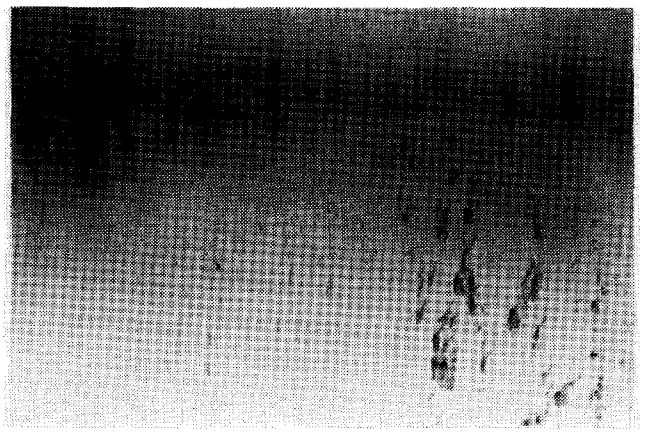

Figure 55. Cavitation Damage on a Babbitted Bearing.

There has been extensive work and research on the cavitation phenomenon in steadily loaded journal bearings, and their performance to a certain extent can be accurately predicted. On the other hand, cavitation behavior in dynamically loaded journal bearings and squeeze film damper bearings is not complete and lags further behind. Cavitation in this type of bearings can have an adverse effect on the film pressure and load capacity of the bearing [16].

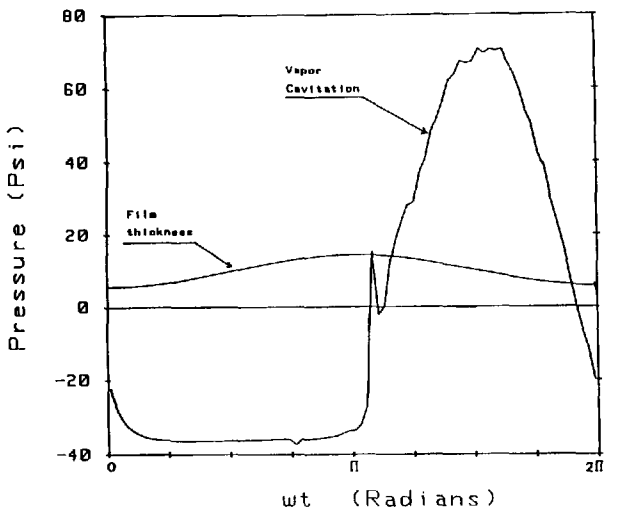

Figure 56. Dynamic Pressure of a Cavitated Damper Bearing.

The subsequent effects on the stiffness and damping coefficients are also considerable.

Pitting and Frosting Due to Shaft Currents

Electrostatic voltage. The source of this voltage is usually traced to impinging droplets in the wet stages of steam turbines, or wet gas droplets at the inlet stages of compressors, when liquid knockout or separators are not capable of removing all the moisture from the gas. Static charges on the rotor build up to a certain voltage level, after which they find their way to ground by arching across journal bearings, thrust bearings, or seals, depending on the location of the minimum oil film thickness (i.e., the path of minimum electrical resistance).

Electromagnetic currents. In electrical machinery, damage to bearings from shaft currents can result from dissymmetry in the magnetic circuits. This dissymmetry could result from mechanical joints in the stator, a difference in the permeability of the magnetic material constituting two flux paths, or by difference in the effective length of these paths. To correct against such a problem, insulation is inserted between one or more of the bearing pedestals and the machine base. In addition, it would be necessary to insulate all piping, stairs, etc., which would otherwise complete the electrical circuit. Electromagnetically generated currents are also known to occur in nonelectrical machinery. The shaft or casing could become magnetized due to rub between rotating and stationary parts causing the generation of DC unipolar induced voltage. Magnetization of machine components could also be caused by welding on or near the machine, or through magnetic particle inspection. There are several good references on this subject [17, 18, 19, 20]. Schier [20] employed a laboratory model that simulated the shaft current self excitation process which developed thousands of amperes of current. This process is analogous to a series wound, self excited DC generator. Damage due to electromagnetic type currents is generally more severe than that due to electrostatic type voltages. It often can cause welding of the journal pads to the retainer.

Electric shaft damage can be distinguished from pitting corrosion or cavitation erosion by the fact that the pits have a shiny appearance when viewed under the microscope at high (50-300) magnification. The shiny appearance is due to the melting of the babbitt by the electric currents. Electric current damage shown in Figures 57, 58, 59, and 60 in a progression of magnifications, clearly showing that the shiny appearance often associated with shaft current damage has its origin in the melting and splattering

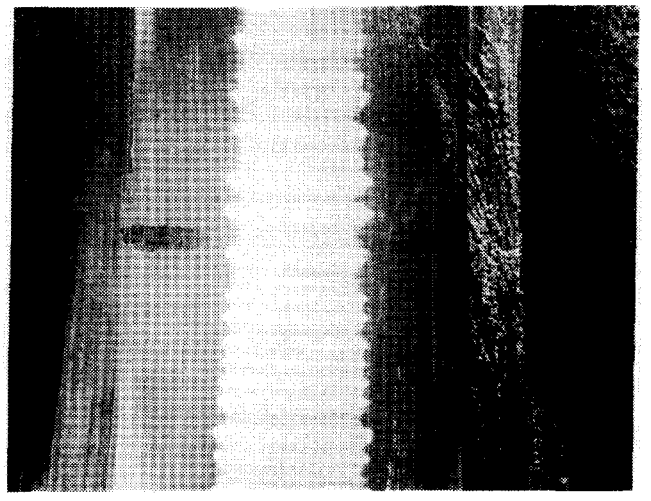

Figure 57. Electromagnetic Shaft Currents Damage Magnified (3).

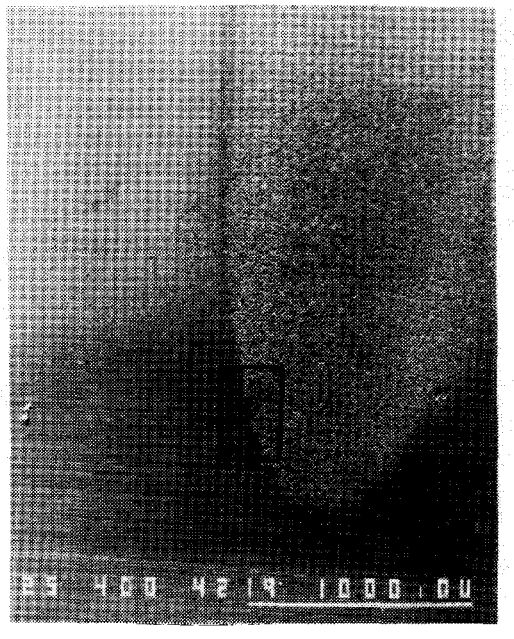

Figure 58. Magnification (40) of the Damage in Figure 57.

of the molten babbitt or metallic bearing surface. Cavitation erosion damage on the other hand, is not associated with high temperature or a shiny rounded appearance at the bottom of the pits. Furthermore, cavitation occurs in the negative pressure region which is typically downstream from the minimum film thickness, while electric discharge takes place at the minimum oil film thickness, since it provides the lowest resistance path to ground.

Brinelling

In certain applications, the dynamic loading, in addition to a high static loading, can lead to high contact stresses which result in local yielding of the radial pad's outside diameter and the corresponding contact area on the shell's inside diameter. This failure is usually referred to as brinelling. As a result of the local yielding and brinelling, the bearing clearance will increase, which in turn results in further increases in the vibration levels and further degradation of the bearing, as shown in Figure 61. The use of the ball-in-socket design provides lower contact stresses due to in-

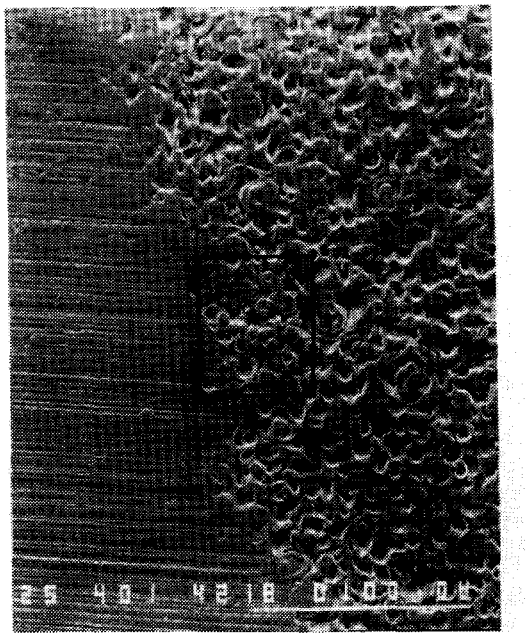

Figure 59. Magnification of the Rectangular Section in Figure 58 (400).

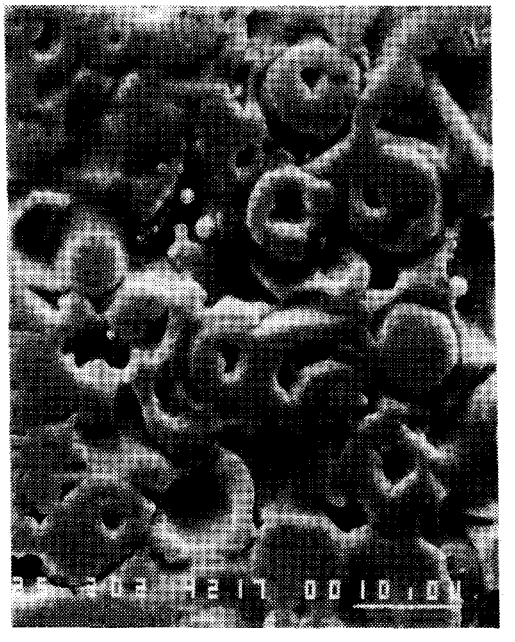

Figure 60. Magnification of the Rectangular Section in Figure 59 (2000).

creased surface area. The stress levels for a rocker back compared to the ball-in-socket configuration is shown in Figure 62. Furthermore, the spherical support is much stiffer than the point or line contact support. This has been shown to have a favorable influence on the fluid film bearing coefficients [21].

Spragging

This term is used to describe the damage often found on the leading edge of unloaded pads in large turbine or generator units. In severe cases, the damage could show signs of fatigue cracking

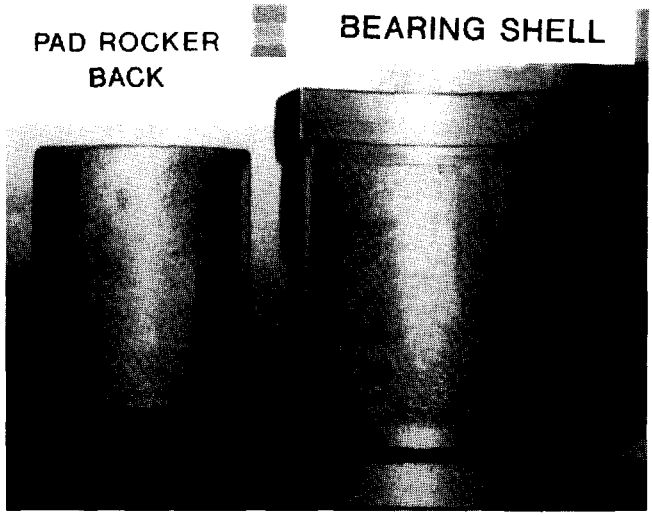

Figure 61. Brinelling on the Pad Back and the I.D. of the Bearing Retainer.

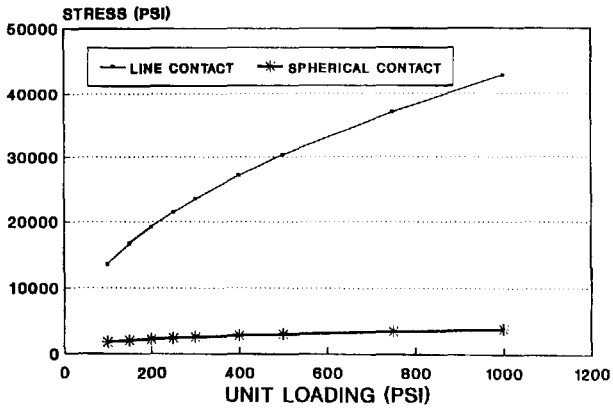

Figure 62. Stress Comparison for a Spherically Seated Pad Vs a Rocker Back Pad.

or wiping. A schematic representation from Adams and Payandeh [22] which describes this phenomenon is shown in Figure 63. The pad floats back and forth between the pivot point and the journal.

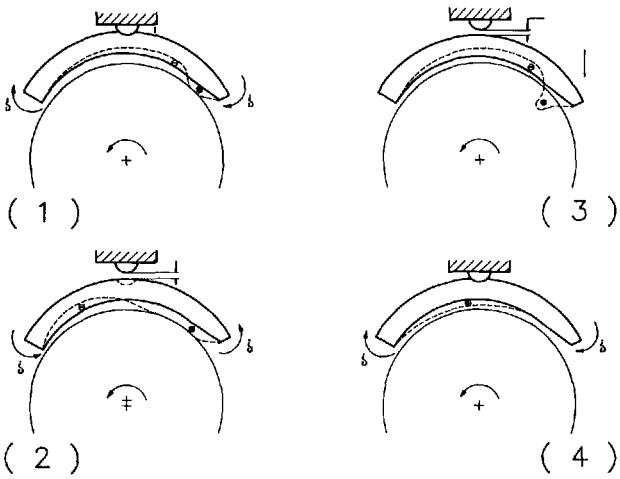

Figure 63. A Schematic Representation of Pad Flutter.

In some cases, momentary contact with the pivot occurs once per cycle. In most cases however, the frequency of the motion is between 0.4 and 0.5 times the rotational speed of the journal. In this regard, the motion appears to be a similar to the oil whirl phenomenon, except that the unloaded pad vibrates instead of the rotor. This self excited vibration could be thought of as simply the absence of a stable static equilibrium position. The investigation [22] identified the spragg relief angle as one of the most influential parameters. For a spragg relief angle of 10 degrees or larger, the self excited vibration is not present since a stable static equilibrium position is found. The effect of spragg relief depth was not found to be as significant a variable as long as the depth is sufficient to insure a converging film geometry as the pad leading edge approaches the journal. The offset was not found to be significant in this investigation; however, if the pad is centered (offset of 0.5) for the purpose of accommodating pads installed backwards, then the pads should have a spragg relief on both the leading and trailing edges. The pad arc was also found to be more influential than expected. The smaller the arc angle, the more stable the pad motion. Therefore, a four pad is more stable than a three pad bearing. Likewise, a five pad is more stable than a four pad bearing. The variation in the arc length to counter the spragg problem can be seen reflected in the four pad bearing design shown in Figure 64.

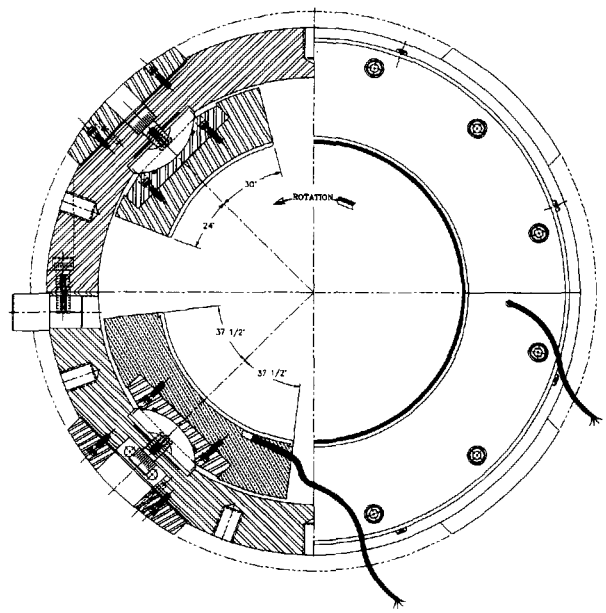

Figure 64. Schematic of a Four Pad Bearing with Short Arc Upper Pads.

In this configuration, the lower loaded pads have a full arc length, while the unloaded pads have a smaller arc length. Another means to counter the spragging problem is through the use of preload. A positive preload is an essential element for the top pads to ensure a stable pad motion. Preload assures that all pads remain statically loaded under all operating conditions. However, preloading is not used on some large turbine/generator sets due to temperature limitations. Another means of suppressing this instability in such a case would be through introducing damping by providing the type of support shown in Figure 65. In this configuration, an elastomeric ring is located in a groove between the ball and socket of the pad. The damping provided by the elastomer ring has been successful in suppressing this instability phenomenon.

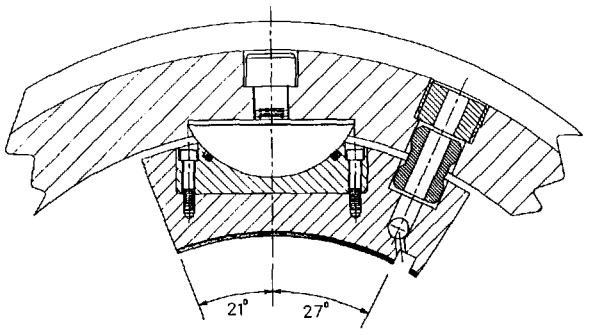

Figure 65. Short Arc Offset Pivot Pad with Elastomeric Damper Ring.

CONCLUSION

Several different but interrelated fields and engineering disciplines are covered. There is no single session, paper, or even book that can adequately and thoroughly cover this topic. What the authors have strived to accomplish is a basic review of the theory and fundamentals of fluid film bearings and their application to turbomachinery. Emphasis was placed on current topics and areas which are of most concern to the practicing engineer. References consulted in the preparation of this tutorial are listed for those interested in further study of the topic.

REFERENCES

1. Lemmon, D. C., Booser, E. R., "Bearing Oil-Ring Performance," ASME Trans. Journal of Basic Engineering, Paper 59-Lub-5, (1959).
2. Nicholas, J. C., "Fundamental Bearing Design Concepts for Fixed Lobe and Tilting Pad Bearings," Dresser-Rand Technical Publications, pp. 51- 78 (1987).
3. Vance, J. M., *Rotordynamics of Turbomachinery*, New York, New York: John Wiley & Sons (1988).
4. Murphy, B. T., "Eigenvalues of Rotating Machinery," Ph. D. Dissertation, Texas A&M University, College Station, Texas (1984).
5. Shelly, P., and Ettles, C., "Solutions for the Load Capacity of Journal Bearings with Oil Grooves, Holes, Reliefs, or Chamfers in Non- Optimum Positions," Institute of Mech. Engineers, Tribology Conference 1970, pp. 38-46 (1970).
6. Murphy, B. T., Rotordynamics Analysis Polynomial Program (RAPP), Rotordynamics-Seal Research Group, Canoga Park, California (1989).
7. Murphy, B. T., and Vance, J. M., "An Improved Method for Calculating Critical Speeds and Rotordynamic Stability of Turbomachinery," ASME Trans., Journal of Engineering for Power, 105, pp.591-595 (July 1983).
8. Tripp, H. A., and Murphy, B. T., "Eccentricity Measurements on a Tilting-Pad Bearing," ASLE Trans., *28* (2), pp. 217-224 (April 1985).
9. Harvey, P. D., Boyer, H. E., and Earle, M., Failures of Shafts and Bearings, ASM, Extension Course (1980).
10. Warriner, J. F., "Thin Shell Bearings for Medium Speed Diesel Engines," Diesel Engineers and Users Association, Publication 364 (February 1975).
11. Jones, J. D., "Overplate Performance for Diesel Engine Bearings," Diesel Progress North America, pp. 32-36 (October 1981).
12. Pratt, G. C., and Whitney, W. J., Jr., "Engine Bearing Overlays: The Effect of Overlay Composition on Diffusion and Post-Diffusion Bearing Performance," SAE Technical Paper Series 830063 (1983).
13. Plain Bearing Failures, *Lubrication, L* (7) (July 1964).
14. Booser, E. R., Ryan, F. D., and Lindinhoker, C. L., "Maximum Temperature for Hydrodynamic Bearings Under Steady Load," Journal of the ASLE, Lubrication Engineering, pp. 226-235 (July 1970).
15. Ramussen, R. E. H., "Some Experiments on Cavitation Erosion in Water Mixed with Air," NPL Symp. Cavitation in Hydrodynamics, 20 HMSO (1965).
16. Zeidan, F. Y., "Cavitation Effects on the Performance of Squeeze Film Damper Bearings," Ph. D. Dissertation, Texas A&M University, College Station, Texas (1989).
17. Sohre, J. S., and Nippes, P., "Electromagnetic Shaft Currents and Demagnetization on Rotors of Turbines and Compressors, *Proceedings of the 7th Turbomachinery Symposium*, Turbomachinery Laboratory, Department of Mechanical Engineering, Texas A&M University, College Station, Texas (1978).
18. Merrick, E. G., "Bearing Currents," General Electric Review, 17, pp. 936-940 (October 1914).
19. Vance, J. M., Palazzolo, A. B., and Zeidan, F. Y., "Electric Shaft Currents in Turbomachinery," *Proceedings of the 16th Turbomachinery Symposium*, Turbomachinery Laboratory, Department of Mechanical Engineering, Texas A&M University, College Station, Texas (1987).
20. Schier, W., "Self Excited Homopolar Direct Currents in the Shafts of Machines," Electrotech ZA, 86, (23), pp. 737-741, Translation No. 3925, Associated Electrical Industries Power Group (November 1965).
21. Earles, L. L., Palazzolo, A. B., and Armentrout, R. W., "A Finite Element Approach to Pad Flexibility Effects in Tilt Pad Journal Bearings," ASME/STLE Tribology Conference, Oct. 17-19, 1989, Fort Lauderdale, Florida.
22. Adams, M. L., and Payandeh, S. "Self-Excited Vibrations of Statically Unloaded Pads in Tilting-Pad Journal Bearings," Journal of Lubrication Technology, 105, pp. 377-384 (July 1983).

ACKNOWLEDGMENTS

The authors express their sincere gratitude to several organizations and individuals who shared with them their knowledge on the subject and provided many of the art work and photographs presented in this tutorial. Frank Warriner of the Glacier Metal Co., and Tom Skingle of J.P.I. Transportation products provided many of the illustrations and photographs presented in the failure analysis section. The first author is greatly indebted to Charles Schimpf who shared with him his many years of experience and knowledge in bearings. Thanks are also due to Jim Jones and George Pratt of Federal Mogul for sharing their knowledge and experience on the tin diffusion phenomenon. Thanks also to Donald Chronister who provided one of the best descriptive photographs on the damage caused by electric shaft currents. Thanks to Doug Latimer for providing photographs on damage caused by thermal ratchetting.